OTTO NEW

COD. 9942074.01

REV. 00 ed.10/26

TABLE 1 - (from 01/07/2026)
OTTO DE/PM

POS	CODE	DESCRIPTION
1	5011721.01YVR	MATT GREEN BODY OTTO+LOGO
1	5011721.01VNR	MATT BLACK BODY OTTO+LOGO
1	5091732.01R	STAINLESS STEEL BODY OTTO+LOGO
1	5011721.01YIR	MATT WHITE BODY OTTO+LOGO
2	5521567.01	BEZZERA GREY LOGO LABEL 101X75
2	5521563	BEZZERA LOGO LABEL 101X75 BLACK
3	7809906	SCREWS POELIER M8X16 A2 AISI304
4	5098407LL	BODY SUPPORT W/COMPASSES
5	7474217	ADHESIVE FEET 12,7 H5,8
6	5964807.01	ASSY FRAME OTTO DE/PM (R)
7	7474215	FEET
8	7471205	MAGNET
9	5340554YIR	ASSY DRIP TRAY OTTO MATT WHITE W/ADHESIVE
9	5340554VNR	ASSY DRIP TRAY OTTO MATT BLACK W/ADHESIVE
9	5340554YVR	ASSY DRIP TRAY OTTO MATT GREEN W/ADHESIVE
9	5340541R	ASSY DRIP TRAY OTTO STAINLESS STEEL W/ADHESIVE
10	5261020	WIRED DISCHARGE GRID
11	5261004	WIRED CUPS GRID
12	5094921.01SG	FRONTGRU.OTTO SERIGRAFATO
13	7816002	SCREW TCEI M4X12 UNI 5931 A2
14	5058503LL	VOLUMETRIC COUNTER SUPPORT
15	5056358LW	CUPS-HEATER SLIDE
16	5076325LW	CUPS-HEATER
17	5074683LW	CUPS-HEATER GRID
18	5074684LW	CUPS-HEATER GRID
19	7819901	SCREW TBEI M4X12 ISO 7380 A2 INOX

TABLE 1 - (from 01/07/2026)
OTTO DE/PM

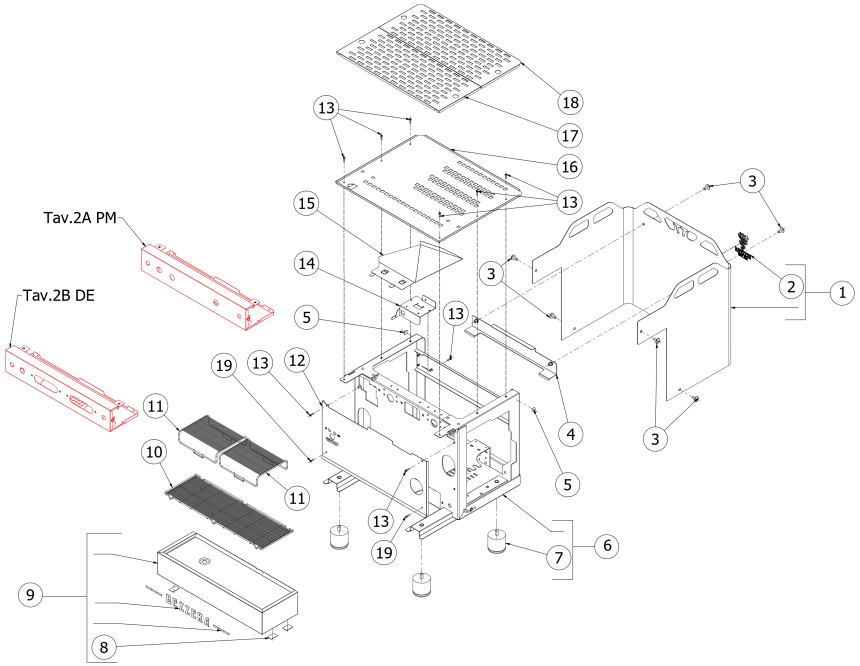

TABLE 1 - (up to 30/06/2026)
OTTO DE/PM

POS	CODE	DESCRIPTION
1	5011721.01YVR	MATT GREEN BODY OTTO+LOGO
1	5011721.01VNR	MATT BLACK BODY OTTO+LOGO
1	5091732.01R	STAINLESS STEEL BODY OTTO+LOGO
1	5011721.01YIR	MATT WHITE BODY OTTO+LOGO
2	5521567.01	BEZZERA GREY LOGO LABEL 101X75
2	5521563	BEZZERA LOGO LABEL 101X75 BLACK
3	7809906	SCREWS POELIER M8X16 A2 AISI304
4	5098407LL	BODY SUPPORT W/COMPASSES
5	7474217	ADHESIVE FEET 12,7 H5,8
6	5964807	ASSY FRAME OTTO DE/PM (R)
7	7474215	FEET
8	7471205	MAGNET
9	5340554YIR	ASSY DRIP TRAY OTTO MATT WHITE W/ADHESIVE
9	5340554VNR	ASSY DRIP TRAY OTTO MATT BLACK W/ADHESIVE
9	5340554YVR	ASSY DRIP TRAY OTTO MATT GREEN W/ADHESIVE
9	5340541R	ASSY DRIP TRAY OTTO STAINLESS STEEL W/ADHESIVE
10	5261020	WIRED DISCHARGE GRID
11	5261004	WIRED CUPS GRID
12	5094921.01SG	FRONTGRU.OTTO SERIGRAFATO
13	7816002	SCREW TCEI M4X12 UNI 5931 A2
14	5058503LL	VOLUMETRIC COUNTER SUPPORT
15	5056358LW	CUPS-HEATER SLIDE
16	5076325LW	CUPS-HEATER
17	5074683LW	CUPS-HEATER GRID
18	5074684LW	CUPS-HEATER GRID
19	7819901	SCREW TBEI M4X12 ISO 7380 A2 INOX

TABLE 1 - (up to 30/06/2026)
OTTO DE/PM

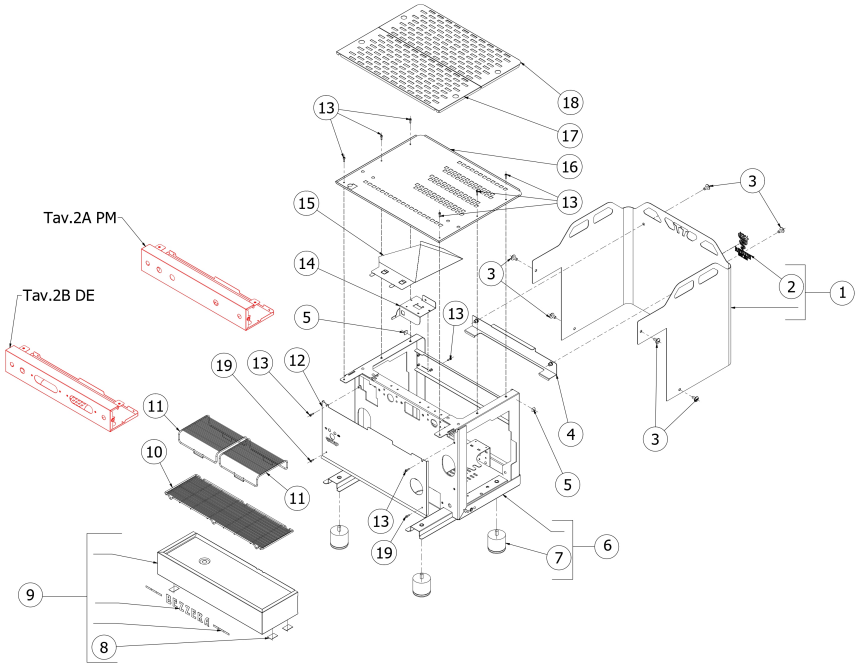

TABLE 2A
OTTO PM

POS	CODE	DESCRIPTION
1	5058479LL	STEAM TAP SUPPORT W/COMPASSES
2	7816002	SCREW TCEI M4X12 UNI 5931 A2
3	5094968LL	OTTO PM STAINLESS STEEL FRONTAL WORK WITH COMPASSES
3	5014260LL-VN	OTTO PM MATT BLACK FRONTAL WORK WITH COMPASSES
3	5014260LL-YV	OTTO PM MATT GREEN FRONTAL WORK WITH COMPASSES
3	5014260LL-YI	OTTO PM MATT WHITE FRONTAL WORK WITH COMPASSES
4	7809906	SCREWS POELIER M8X16 A2 AISI304
5	7819901	SCREW TBEI M4X12 ISO 7380 A2 INOX
6	5053067LW	REGULATION TAP COVER
7	7809817	SCREW M4X12
8	7633354SG1	SWITCH 230V COFFEE
9	7633354SG2	SWITCH 230V WATER

TABLE 2A
OTTO PM

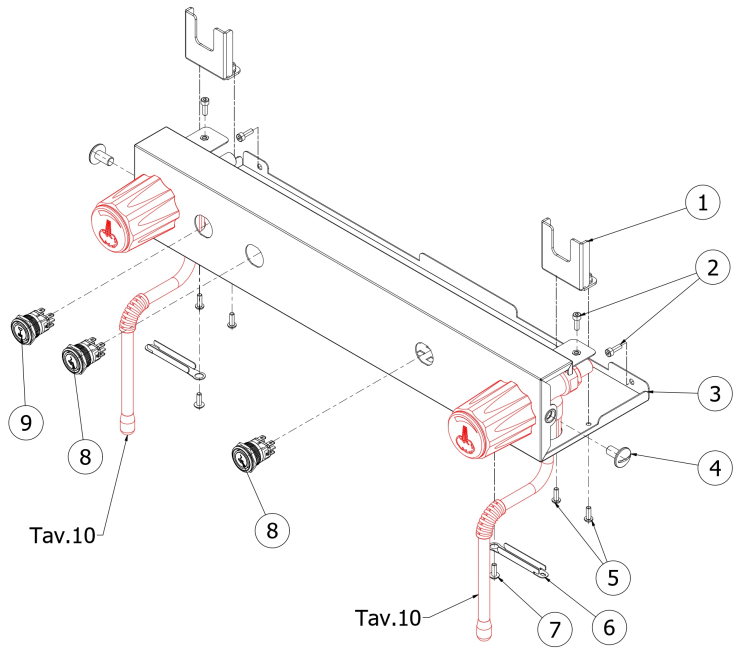

TABLE 2B
OTTO DE

POS	CODE	DESCRIPTION
1	5058479LL	STEAM TAP SUPPORT W/COMPASSES
2	7816002	SCREW TCEI M4X12 UNI 5931 A2
3	5014259LL-YI	OTTO DE 3 KEYS MATT WHITE FRONTAL WORK WITH COMPASSES
3	5014259LL-VN	OTTO DE 3 KEYS MATT BLACK FRONTAL WORK WITH COMPASSES
3	5014259LL-YV	OTTO DE 3 KEYS MATT GREEN FRONTAL WORK V
3	5094967LL	OTTO DE 3 KEYS STAINLESS STEEL FRONTAL WORK WITH COMPASSES
4	7809906	SCREWS POELIER M8X16 A2 AISI304
5	7819901	SCREW TBEI M4X12 ISO 7380 A2 INOX
6	5053067LW	REGULATION TAP COVER
7	7809817	SCREW M4X12
8	5058519LL	3 KEYS MASK
9	7633356SG5	KEYBOARD 5A 250V LED 5V
10	7633356SG4	KEYBOARD 5A 250V LED 5V 2 COFFEE
11	7633356SG3	KEYBOARD 5A 250V LED 5V 1 COFFEE
12	7819926	NUT M3
13	7633356SG6	KEIYBOARD 5A 250V LED 5V WATER

BEZZERA OTTO NEW

TABLE 2B
OTTO DE

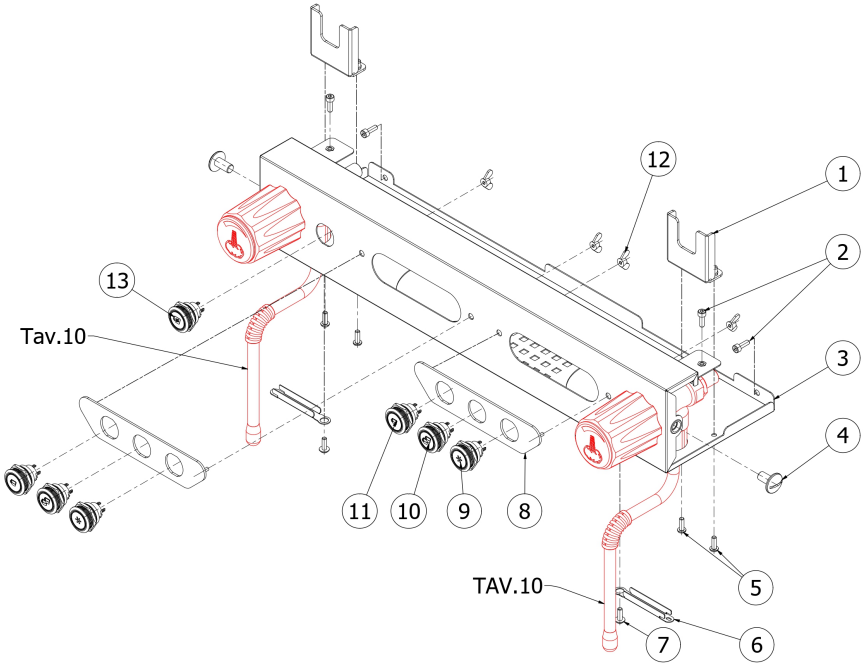

TABLE 3
OTTO DE/PM

POS	CODE	DESCRIPTION
1	7809903	SCREWS POLIERS M5X16 A4 AISI316
2	5470501	SHOWER D57 AISI 304
3	5285501AL	SHOWER-HOLDER D57 H7.5 OT60LF
4	7493025	GASKET RING H8,5 65SH BLUE
5	5280502TW-AL	COUPLING RING DENICROMAL
6	7496004.02	GASKET OR 139 VITON FKM
7	5283520.02AL	CARTRIDGE FLANGE D60X14,5 OT60LF
8	5018460.01CT	SUPPORT COUPLING RING
9	7814002	NOTCHED WASHER D4
10	7816021	SCREW TCEI M5X25 UNI 5931 A2
11	5301504AL	ELBOW FITTING M12X1/8
12	7634808	THERMAL SAFETY DEVICE 250V 95°C
13	5162495LL	SOLENOID VALVE PIPE
14	5302004AL	FITTING M12X1/8
15	5302014AL	FITTING M13X1/8
16	5223003	JET M6 X 6 HOLE D0.8 OT
17	7702419R	SOLENOID VALVE ODE 3 WAYS 110/120V
17	7702418R	SOLENOID VALVE 3 WAYS ODE 230/240V 50/60HZ
18	5370313	GROUP E.VALVE DRAIN RUBBER HOLDER
19	7611516	CLAMP 10086
20	7816014	SCREW M8X20 UNI5931 A2
21	5963222	ASSY HEATING ELEMENT CARTRIDGE 110/120V
21	5963221.01	ASSY CARTRIDGE HEATING ELEMENT220/240V 100W

BEZZERA OTTO NEW

TABLE 3
OTTO DE/PM

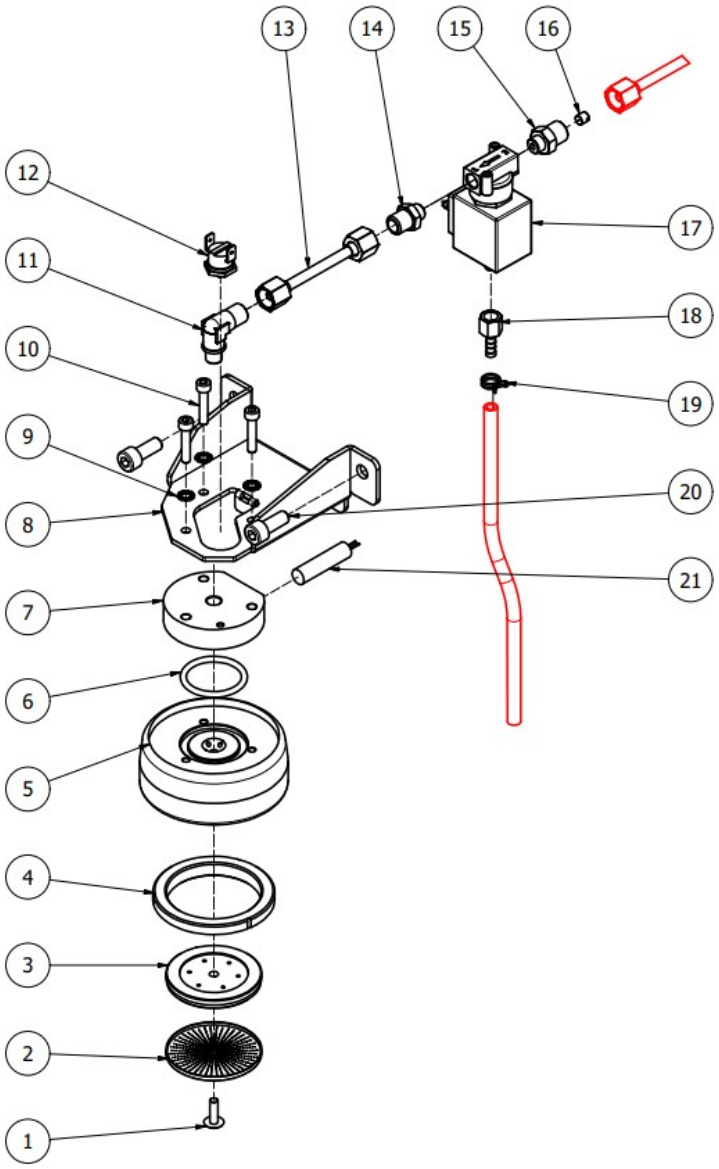

TABLE 4
OTTO DE/PM

POS	CODE	DESCRIPTION
1	7470601	VIBRATION-DAMPING D25X10
2	7812701	NUT M6 DIN6923 INOX A2
3	5058502LW	MOTOR SUPPORT
4	7814002	NOTCHED WASHER D4
5	7816027	SCREW TCEI M5X8 UNI5931 A2
6	7730506	ROTARY PUMP 100L/H PA104X
7	7496033	OR GASKET 2075 VITON
8	7374005	PROCON PUMP FILTER
9	5302057AL	FITTING 1/8
11	7304505.01TR	ELBOW FITTING 3 WAYS
12	7304538TR	FITTING
13	7303044TR	FITTING 3/8
14	5302012.01AL	STRAIGHT FITTING 3/8
15	7730508	KIT PUMP 48YZ
16	7611508	PUMP CLAMP
17	7742404.03	ELECTRIC MOTOR 220/240V 6MF 50/60HZ
17	7741005.03	ELECTRIC MOTOR 110V 25MF 50/60HZ

BEZZERA OTTO NEW

TABLE 4
OTTO DE/PM

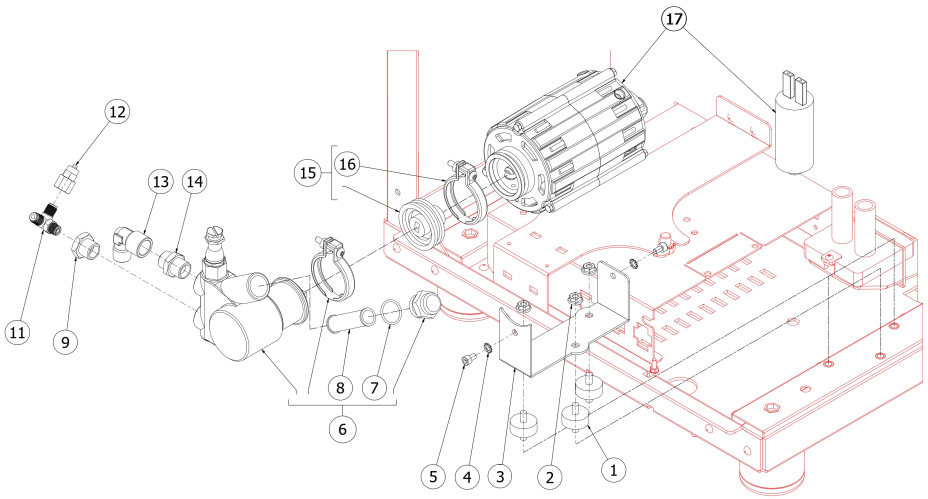

TABLE 5
OTTO DE/PM

POS	CODE	DESCRIPTION
1	5301506TR	UNION ELBOW M13X1/4
2	7304542TR	FITTING/CONIC TEE 1/8
3	5721130.01AL	HEATING ELEMENT 110V 1800W
3	5722252.01AL	HEATING ELEMENT 220/240V-2600/3050W
4	5492006	GASKET D76 X 39 X 2 ASBESTOS FREE
5	7615003	FASTON 45° HOLE D4.3
6	7814001	WASHER D4 DIN 6798A A2
7	7826212	SCREW TCI M4X6 UNI 6107 OT
8	5058478	SUPPORT COVER HEATING ELEMENT CONTACTS
9	7816423	SCREW TE M8X18 UNI5739 A2
10	5373109	COVER HEATING ELEMENT CONTACTS
11	5192314	SUCTION HOSE D6 L=180MM PTFE
12	5302075AL	FITTING M13-1/8"G
13	7304502TR	STRAIGHT FITTING 1/8
14	5329021DC-AL	EXCHANGER 2 HOLES L=235
15	5495007	COPPER GASKET D32X40
16	5973128LL	L/A PROBE COMPLETE
17	5321026BL	BOILER 2GR COMPACT
18	5192324	DRAW OUT D6X1 L=100 PTFE
19	5963047.01	ASSY CUP+O RING+VALVE PLUG
20	5965015.07	ASSY SECURITY VALVE 1,65 BAR VITON
21	7496094	O-RING GASKET 102 VITON 70SH
22	5264017.02	SECURITY VALVE PIN
23	5226417.01	SECURITY VALVE 1/8"G PLUG
24	9991029	BOILER COVER OTTO 690X245 SP10

TABLE 5
OTTO DE/PM

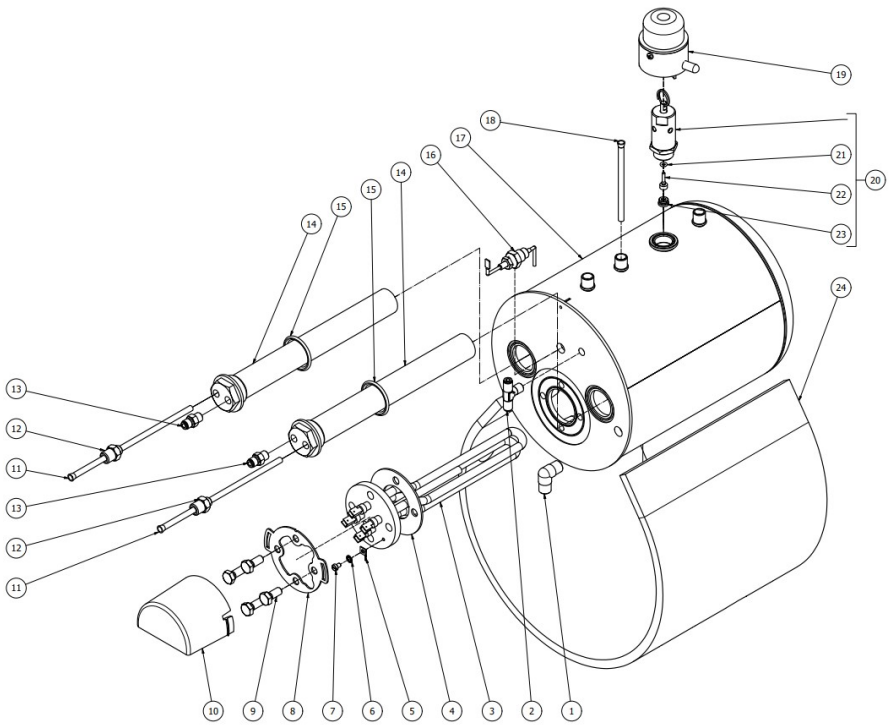

TABLE 6A
OTTO PM

POS	CODE	DESCRIPTION
1	5162534LL	EXCHANGER PIPE 2°GR FITTING 1/8
2	5162533LL	EXCHANGER PIPE 1°GR FITTING 1/8
3	5162532LL	SURPRESSION VALVE PIPE FITTING 1/8
4	7304001AL	FITTING 1/8
5	5492019	GASKET D8 X 2 ASBESTOS FREE
6	5221835	CAP NUT 1/8

BEZZERA **OTTO NEW**

TABLE 6A
OTTO PM

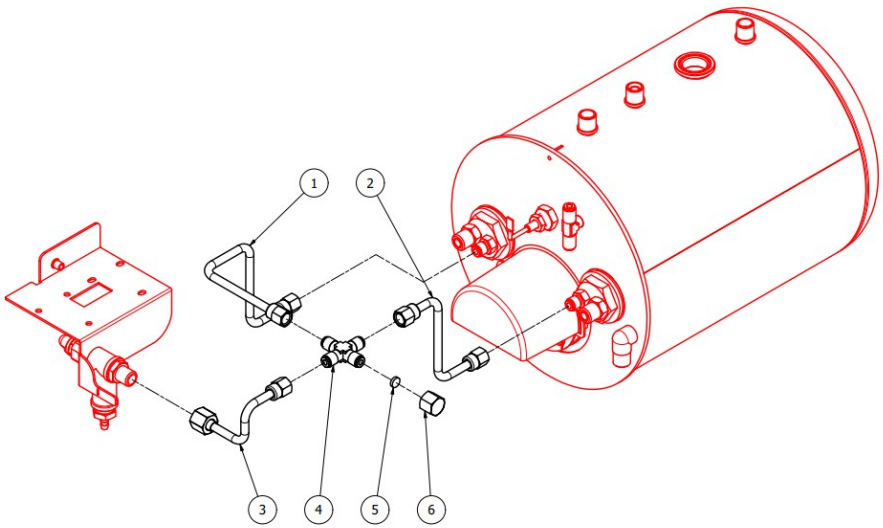

TABLE 6B
OTTO DE

POS	CODE	DESCRIPTION
1	7431001.01	VOLUMETRIC COUNTER+AUTOMATIC LED
2	7496024	OR 2031
3	5130501	COPPER WASHER 13.5X18X1,5
4	5471041	NET FILTER D11 H7 AISI304
5	5302088AL	FITTING 1/4
6	5302089AL	FITTING 1/4
7	5162518LL	VOL. COUNTER/EXCHANGER PIPE 2°GR
8	5162530LL	VOL.COUNTER PIPE 2°FITTING 1/8
9	7304001AL	FITTING 1/8
10	5221835	CAP NUT 1/8
11	5492019	GASKET D8 X 2 ASBESTOS FREE
12	5162531LL	FITTING PIPE 1/8
13	5162529LL	VOL.COUNTER PIPE 1°FITTING 1/8
14	5162517LL	VOL.COUNTER/EXCHANGER PIPE 1°GR
15	7816009	SCREW TCEI M4X10 UNI 5931A2

BEZZERA **OTTO NEW**

TABLE 6B
OTTO DE

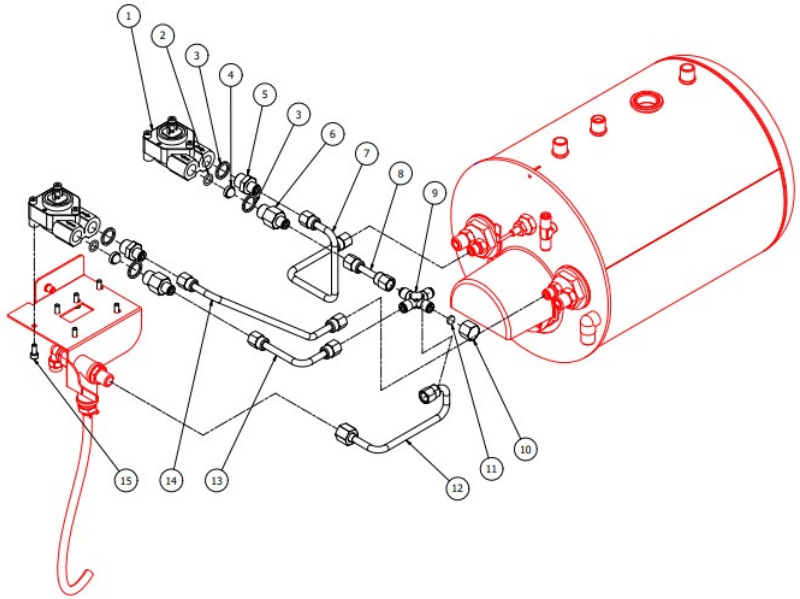

TABLE 7 - (up to 30/06/2026)
OTTO DE/PM

POS	CODE	DESCRIPTION
1	5163399LL	LEFT STEAM COPPER PIPE
2	5162317.01LL	PRESSOSTAT PIPE
3	5492028	GASKET D10.5X4X3
4	7433025	PRESSOSTAT XP100 1/4
5	5163400LL	RIGHT STEAM COPPER PIPE
6	5163401LL	WATER COPPER PIPE
7	5302014AL	FITTING M13X1/8
8	7702320.01	EV.2 WAY 220/230V BIG COIL
8	7701121.01	SOLENOID VALVE 2WAY OLAB 110V BIG
8	7702414.01	EV.2 WAYS OLAB 240V BIG COIL
9	7304502TR	STRAIGHT FITTING 1/8
10	5225310AL	FITTING MF 1/8
11	5226405AL	PLUG 1/4
12	5222228AL	SPARKLING WATER ARCADIA SHORT
13	5471532.01	SPRING FOR ARTICULATION
14	5190501	CUP FOR FITTING PTFE/GLASS
15	5966566	WATER TUBE SEMISPHERE 14.3
16	5226601TW	WATER HOSE TERMINAL
17	5194699	SILICON PIPE 8X5X120
18	7611516	CLAMP 10086
19	5194540	SILICON PIPE D8X5X1.5 L=300
20	5162520LL	EXCHANGER/SOLENOID VALVE PIPE 2°GR
21	5162519LL	EXCHANGER/SOLENOID VALVE PIPE 1°GR
22	5194621.01	TUBE PTFE 6X270
23	5471545	SPRING COVER TUBE PTFE
24	5194672	TUBE PTFE 6X120
25	7304535TR	T FITTING D6 1/8"G RUVECO
26	5471019	FILTER D8,5X5 AISI304
27	5223024	JET M5X5 HOLE D0.8 OT
28	5163409LL	OTTO BOILER LOAD PIPE

BEZZERA OTTO NEW

TABLE 7 - (up to 30/06/2026)
OTTO DE/PM

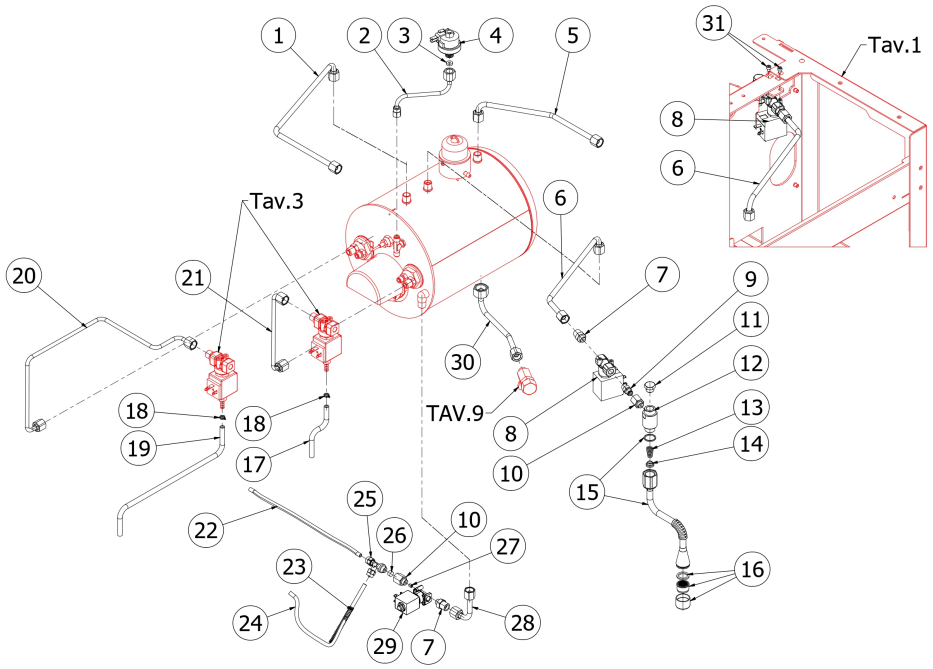

TABLE 7 - (up to 30/06/2026)
OTTO DE/PM

POS	CODE	DESCRIPTION
29	7701123.01	EV.2 WAY 110V 25BAR SMALL COIL
29	7702322.01	EV.2WAY OLAB 220/230V 25BAR SMALL
29	7702415.01	EV.2 WAY 240V 25BAR SMALL COIL
30	5163398LL	DRAIN TUBE BOILER OTTO
31	7816017	SCREW TCEI M4X6

BEZZERA OTTO NEW

TABLE 7 - (up to 30/06/2026)
OTTO DE/PM

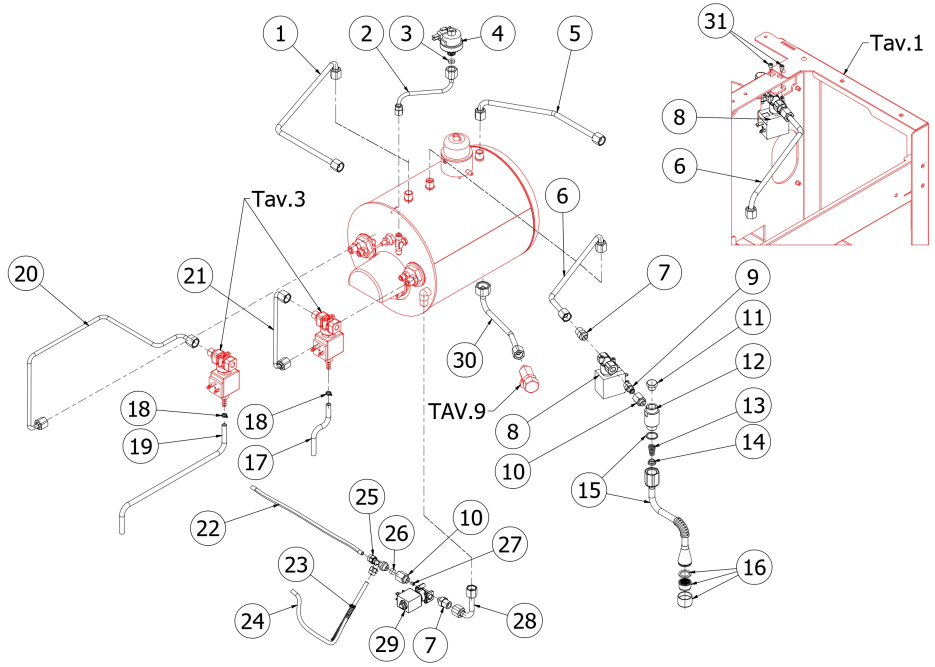

TABLE 7 - (from 01/07/2026)
OTTO DE/PM

POS	CODE	DESCRIPTION
1	5163399LL	LEFT STEAM COPPER PIPE
2	5162317.01LL	PRESSOSTAT PIPE
3	5492028	GASKET D10.5X4X3
4	7433025	PRESSOSTAT XP100 1/4
5	5163400LL	RIGHT STEAM COPPER PIPE
6	5163401LL	WATER COPPER PIPE
7	5302014AL	FITTING M13X1/8
8	7702320.01	EV.2 WAY 220/230V BIG COIL
8	7701121.01	SOLENOID VALVE 2WAY OLAB 110V BIG
8	7702414.01	EV.2 WAYS OLAB 240V BIG COIL
9	7304502TR	STRAIGHT FITTING 1/8
10	5225310AL	FITTING MF 1/8
11	5226405AL	PLUG 1/4
12	5222228AL	SPARKLING WATER ARCADIA SHORT
13	5471532.01	SPRING FOR ARTICULATION
14	5190501	CUP FOR FITTING PTFE/GLASS
15	5966566	WATER TUBE SEMISPHERE 14.3
16	5226601TW	WATER HOSE TERMINAL
17	5194699	SILICON PIPE 8X5X120
18	7611516	CLAMP 10086
19	5194540	SILICON PIPE D8X5X1.5 L=300
20	5162520LL	EXCHANGER/SOLENOID VALVE PIPE 2°GR
21	5162519LL	EXCHANGER/SOLENOID VALVE PIPE 1°GR
22	5194621.01	TUBE PTFE 6X270
23	5471545	SPRING COVER TUBE PTFE
24	5194672	TUBE PTFE 6X120
25	7304535TR	T FITTING D6 1/8"G RUVECO
26	5471019	FILTER D8,5X5 AISI304
27	5223024	JET M5X5 HOLE D0.8 OT
28	5163409LL	OTTO BOILER LOAD PIPE

BEZZERA **OTTO NEW**

TABLE 7 - (from 01/07/2026)
OTTO DE/PM

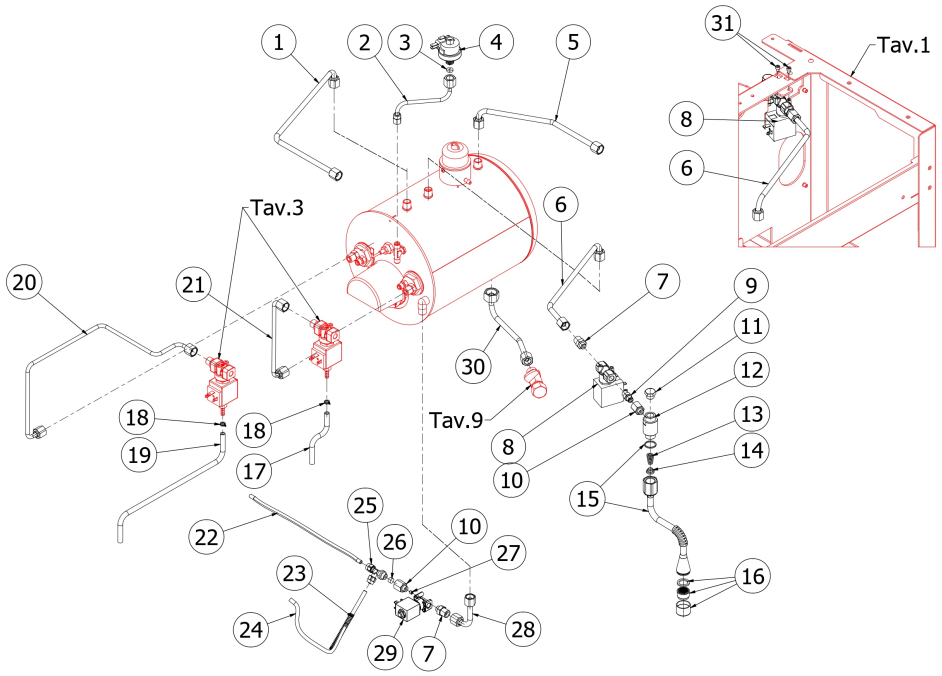

TABLE 7 - (from 01/07/2026)
OTTO DE/PM

POS	CODE	DESCRIPTION
29	7701123.01	EV.2 WAY 110V 25BAR SMALL COIL
29	7702322.01	EV.2WAY OLAB 220/230V 25BAR SMALL
29	7702415.01	EV.2 WAY 240V 25BAR SMALL COIL
30	7200522	FLEXIBLE BOILER DRAIN HOSE
31	7816017	SCREW TCEI M4X6

BEZZERA OTTO NEW

TABLE 7 - (from 01/07/2026)
OTTO DE/PM

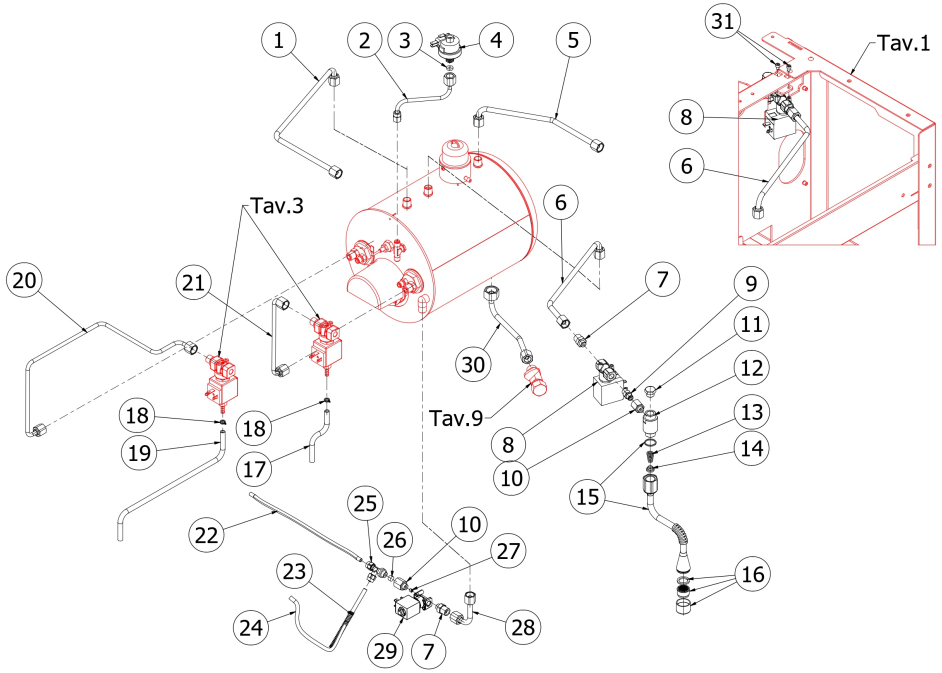

TABLE 8
OTTO DE/PM

POS	CODE	DESCRIPTION
1	5302077AL	FITTING PORT.M14X1 OTXTUBO6X4 OT57USA
2	7496052	OR GASKET 114 VITON
3	5471539	CALIBRATED SPRING D.1,6
4	5224620AL	GASKET-HOLDER ES.12X6.8 OT57USA
5	5493042	GASKET D.11X3
6	5283053TP	SURPRESSION VALVE BODY
7	7496018	OR GASKET 105
8	5224615AL	GASKET-HOLDER SURP.VALVE OT57USA
9	5471505	CALIBRATED SPRING D0.45 H22 AISI302
10	5302017AL	FITTING M12 ES16 H26.5 OT57USA
11	5471019	FILTER D8,5X5 AISI304
12	7304536TR	UNION ELBOW D6 1/8"G RUVECO
13	7611516	CLAMP 10086
14	5194554	SURPRESSION VALVE DRAIN HOSE

BEZZERA OTTO NEW

TABLE 8
OTTO DE/PM

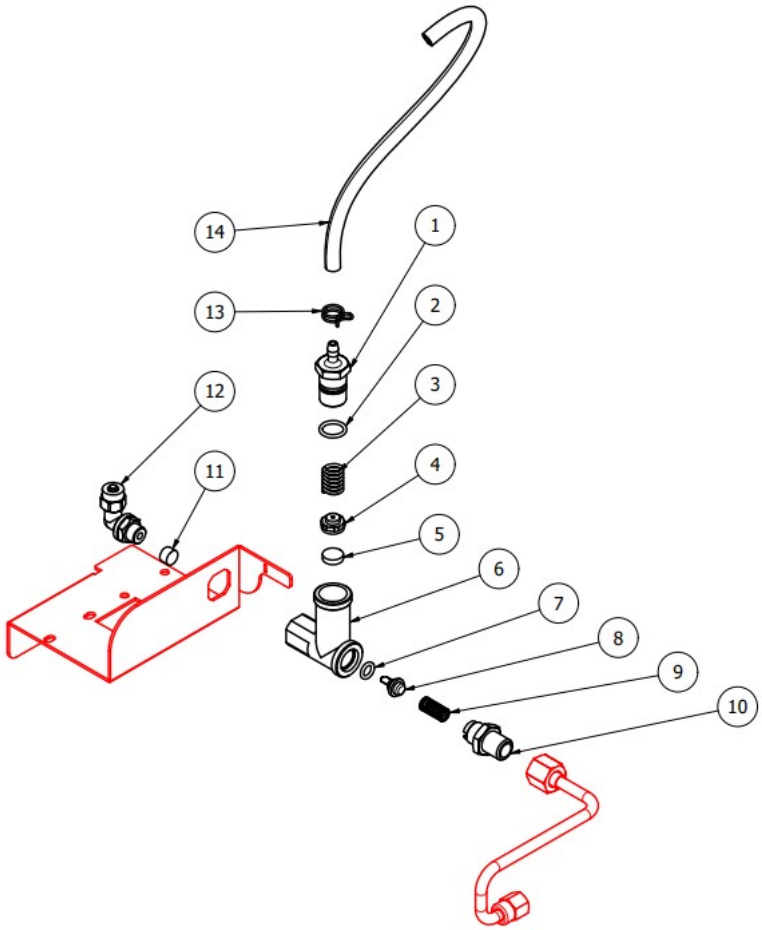

TABLE 9 - (up to 30/06/2026)
OTTO DE/PM

POS	CODE	DESCRIPTION
1	7432524.01	PRESSURE GAUGE D60
2	7451504	BALL VALVE MINIBALL 1/4
3	5221869	WASHER D14 X 20 X 1.5 COPPER
4	5302078AL	FITTING 3/8
5	5492011	GASKET D15X3 ASBESTOS FREE
6	5221819	CAP NUT 3/8
7	5225294	FITTING M/F 3/4X3/8
8	5013005LW	DRAIN BOWL COVERING
9	5963038.01	ASSY DISCHARGE TANK
10	7633355SG	SWITCH 110V ON/OFF
10	7633354SG	SWITCH 230V ON/OFF
11	7633628	WHITE LAMP
12	5194671	SILICON TUBE 18X24L85
13	7303503	PIPE D12.7X18.8 3/4FC L=200CM

TABLE 9 - (up to 30/06/2026)
OTTO DE/PM

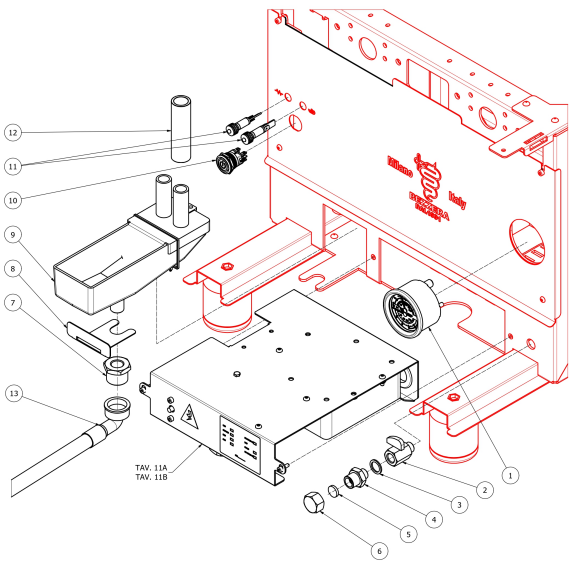

TABLE 9 - (from 01/07/2026)
OTTO DE/PM

POS	CODE	DESCRIPTION
1	7432524.01	PRESSURE GAUGE D60
2	7451508	SPHERE VALVE 3/8"G
4	5302078AL	FITTING 3/8"G ES22 H28 OT57USA
5	5492011	GASKET D15X3 ASBESTOS FREE
6	5221819	CAP NUT 3/8
7	5225294	FITTING M/F 3/4X3/8
8	5013005LW	DRAIN BOWL COVERING
9	5963038.01	ASSY DISCHARGE TANK
10	7633355SG	SWITCH 110V ON/OFF
10	7633354SG	SWITCH 230V ON/OFF
11	7633628	WHITE LAMP
12	5194671	SILICON TUBE 18X24L85
13	7303503	PIPE D12.7X18.8 3/4FC L=200CM

BEZZERA OTTO NEW

TABLE 9 - (from 01/07/2026)
OTTO DE/PM

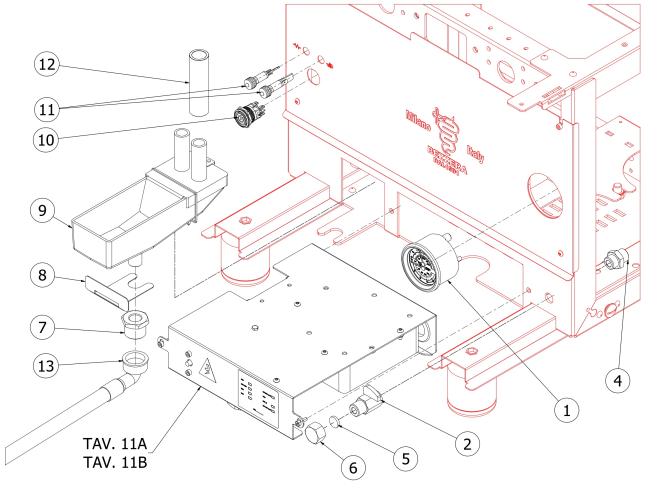

TABLE 10
OTTO DE/PM

POS	CODE	DESCRIPTION
1	5373932CM	STEAM CAP D45 CHROMED
2	7819920	SCREWS TE M5X10 C/KNURLED STAINLESS
3	5371816	HANDLE D54 MATT BLACK K30
4	5220415.01	TAP AUCTION
5	5221882CM	CHROMED LOCKING NUT 3/8
6	5260600	STUD
7	5260205DL	SHAFT D12X60,5 AISI303
8	5471513	SPRING D8 H17 AISI302
9	5261801	WASHER D11
10	5494004	GASKET D12 X 6 PTFE GRAPHITIZED
11	5221826	NUT 3/8
12	5283058AL	TAP BODY 3/8
13	5496042	GASKET D11X4X4 EPT 70
14	5224603AL	GASKET HOLDER D12X12 OT57USA
15	5225309.01AL	FITTING M13X3/8
16	7479994.01	STEAM TUBE 4 HOLES
17	5471532.01	SPRING FOR ARTICULATION
18	5190501	CUP FOR FITTING PTFE/GLASS
19	5964097	ASSY TAP ROD
20	5964104	ASSY TAP 3/8

TABLE 10
OTTO DE/PM

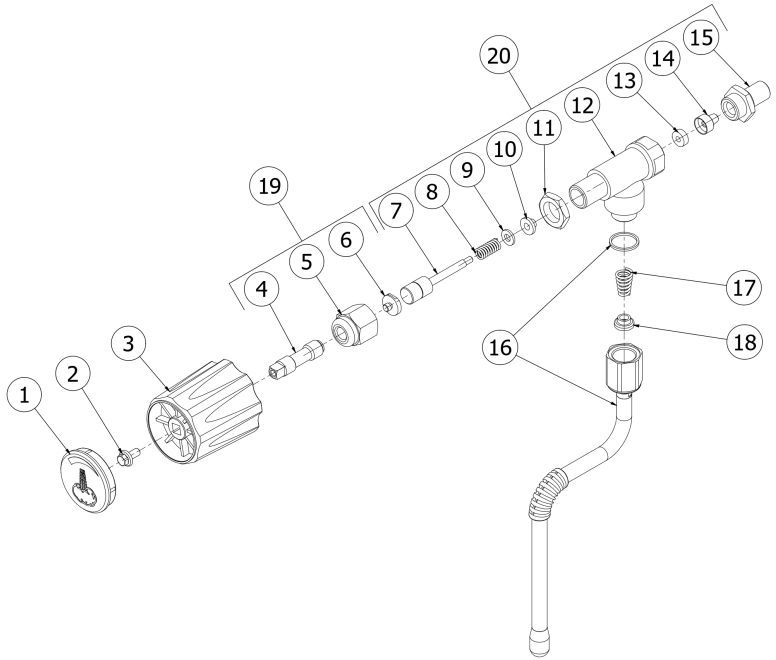

TABLE 11A
OTTO PM

POS	CODE	DESCRIPTION
1	7612514	VISE FV173 4 CONTACS
2	7661007.01R	CONTROL UNIT 220/240V 50/60HZ
2	7661006.01R	LEVEL REGULATOR 100/120V 50/60HZ
3	7663016	FERRITE FIRE RATE A CARDINE 6.6MM
4	7434033	MANUAL TERMOSTAT
5	7614004	NUT PG21 ES.30 H6 POLYAMIDE
6	7614002	CABLE-PRESS PG21 POLYAMIDE
7	5052405.01LW	ELECTRICAL BOX OTTO
8	7663010	THREE PHASE FILTER
9	7635424.01	RELAIS SSR FOR T.PID
10	5058133LL	EMC FILTER BRACKET OTTO W/BUSHES

BEZZERA OTTO NEW

TABLE 11A
OTTO PM

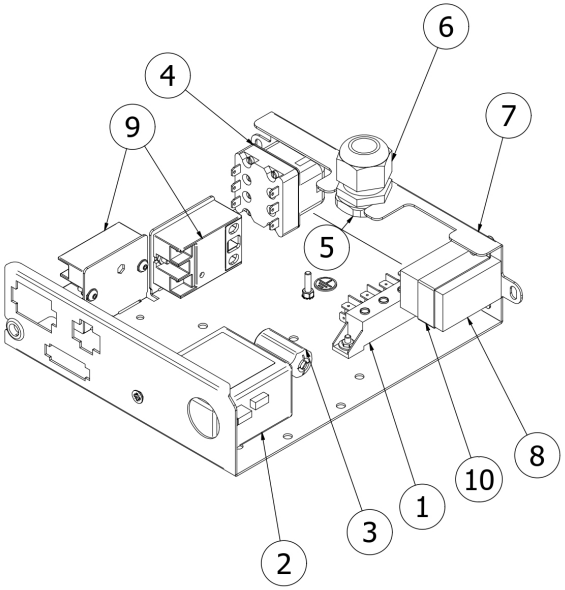

TABLE 11B
OTTO DE

POS	CODE	DESCRIPTION
1	7612514	VISE FV173 4 CONTACS
2	7662641.05PR	ELECTRONIC DOSAGE 110/120V V2.3
2	7662643.04PR	ELECTRONIC DOSAGE 220/240V
2	7662759GI	DOSAGE 3D5 DE LUXE SW. 1.07
3	7635430	RELAIS SSR 20/280
4	7434033	MANUAL TERMOSTAT
5	7614004	NUT PG21 ES.30 H6 POLYAMIDE
6	7614002	CABLE-PRESS PG21 POLYAMIDE
7	5052405.01LW	ELECTRICAL BOX OTTO
8	7663010	THREE PHASE FILTER
9	5058133LL	EMC FILTER BRACKET OTTO W/BUSHES

BEZZERA OTTO NEW

TABLE 11B
OTTO DE

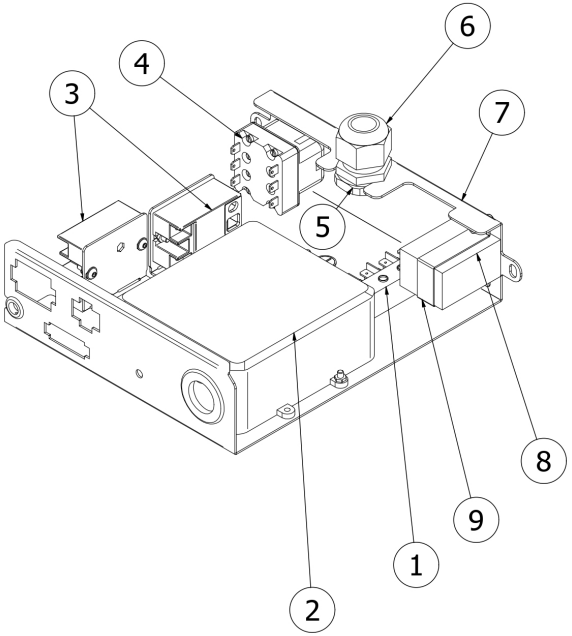

TABLE 12
OTTO DE/PM

POS	CODE	DESCRIPTION
1	5302034AL	FITTING 3/8
2	5302012.01AL	STRAIGHT FITTING 3/8
3	5471031.01	FILTER 1 CUP 10 GRAMS
4	5471038	BLIND FILTER AISI304
5	5471035	FILTER 2 CUPS 20 GRAMS
6	7990603	CLEANING BRUSH FOR COFFEE MACHINE
8	5471527	FILTER-HOLDER SPRING D1.2 AISI 302
9	5286016TW	FILTER-HOLDER TILTED HANDLE BZ
10	7305006TW	SPOUT 1 WAY S/PB+PWP
11	7809810	SCREW PLAS FIX 45 TC POZI D.3,5X10
12	5371203	HANDLE
13	7816026	SCREW TCEI M12X60
14	7493021	GASKET FOR LOGO HANDLE
15	5371204.01	CHROMED PLUG
16	5371205.01	BEZZERA VINTAGE LOGO LABEL
17	5965586.03R	ASSY FILTER-HOLDER BZ GROUP 1CUP
18	7305007TW	SPOUT 2 WAYS WITHOUT PB+PWP
19	5965587.03R	ASSY FILTER-HOLDER BZ GROUP 2CUPS

BEZZERA OTTO NEW

TABLE 12
OTTO DE/PM

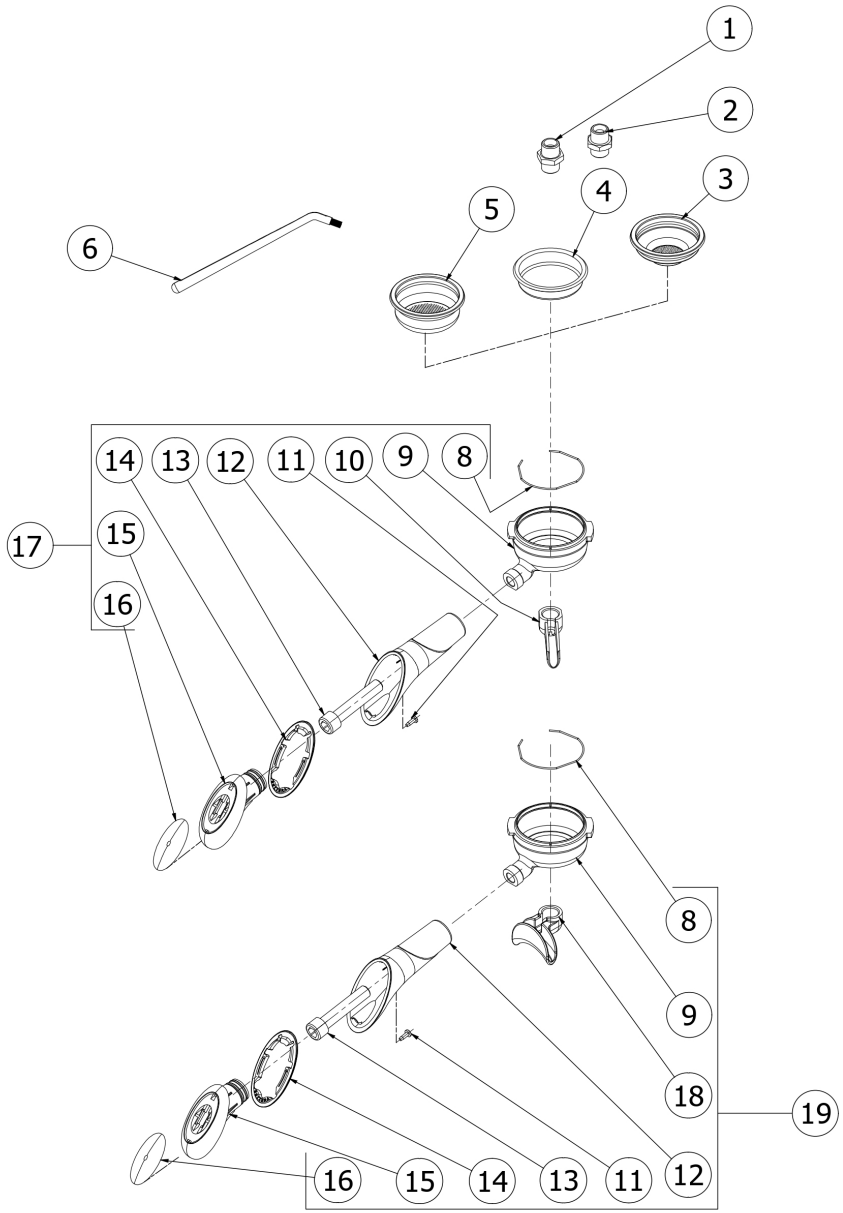

G.BEZZERA S.R.L.
MACCHINE PER CAFFE' ESPRESSO
Via Luigi Bezzera,1
20088 Rosate - Milano - Italy
Tel. +39 02 90848102 r.a.
Web: www.bezzera.com
e-mail: admin@bezzera.it