MAGICA

COD. 9942049.05

REV. 00 ed.11/26



TABLE 1
MAG 1S

POS	CODE	DESCRIPTION
1	5163205.01CM	CUP-HEATER
2	5074631.01LW	CUPS-HEATER GRID STAINLESS STEEL POLISHED
3	7818604	TE D4.2X13 SELF-TIGHT SCREW
4	7474221	SQUARE FOOT
5	5056301LW	CUPS-HEATER TANK
6	7816002	SCREW TCEI M4X12
7	5344023.01	BODY STAINLESS STEEL POLISHED
8	5340003.05LL	CHASSIS BLACK
8	5340019LL	MAGICA PM PID CHASSIS
9	7474218	FEET M10 D40X46
10	5340513	DRIP TRAY STAINLESS STEEL POLISHED
11	5261012	DIP TRAY GRID
13	7815005	FLAT WASHER D4.5X12 A2 AISI304
14	5961727.01	ASSEMBLY CUPS-HEATER
15	5521512	BEZZERA LABEL

BEZZERA MAGICA

TABLE 1
MAG 1S

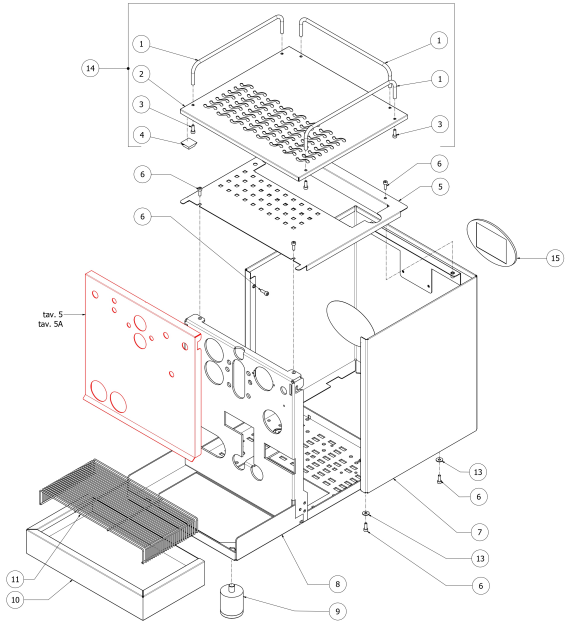

TABLE 2 - (up to 10/03/2019)
MAG1S

POS	CODE	DESCRIPTION
1	7373006.04R	TANK
2	7812001	CAP NUT M4 STAINLESS STEEL
3	7374004	WASHER D4 NYLON
4	7819912	SCREW M4X6
5	5194540	HOSE 8X5 L=300 SILICONE
6	5224414.01AL	RUBBER-HOLDER D7,5
7	7496073.01	OR GASKET 115 EP856
8	5471521.01	COUPLING SPRING
9	5471509	BALL 7/32" AISI 304
10	5224617AL	GASKET-HOLDER D14.5 X 25 OT
11	5963009.03	ASSEMBLY TANK SUPPORT
15	5221830	NUT M20 H5 OT
16	5225228.01AL	FITTING M20 H28.5 OT
17	7826206	SCREW TCI M3X30 UNI 6107 OT
18	5225246AL	FITTING 1/8"G CONIC ES.10 H33 OT
19	5194529	CRISTAL HOSE D6 X 9 L=150MM
20	7611512	CLAMP
21	7731025.01	VIBRATION PUMP OL PLUS 100V 50/60HZ
21	7731024.01	VIBRATION PUMP OL PLUS 120V 60HZ
21	7731026.01	VIBRATION PUMP OL PLUS 220V 50/60HZ
21	7731023.01	VIBRATION PUMP OL PLUS 230V 50HZ
21	7731027.01	VIBRATION PUMP OL PLUS 240V 50HZ
22	7303006	RUBBER-HOLDER FITTING
23	7303036TR	STRAIGHT FITTING 1/8
24	7634816	THERMIC SAFETY DEVICE 100°C AUTOMATIC
25	7470602	VIBRATION-DAMPING
27	7815003	PLAIN WASHER D5 UNI 6592 A2
28	7816004	SCREW TCEI M4 X 16
29	7701123.01	EV.2 WAY OLAB 110V 25BAR SMALL COIL
29	7702322.01	EV.2WAY OLAB 220/230V 25BAR SMALL COIL

BEZZERA MAGICA

TABLE 2 - (up to 10/03/2019)
MAG1S

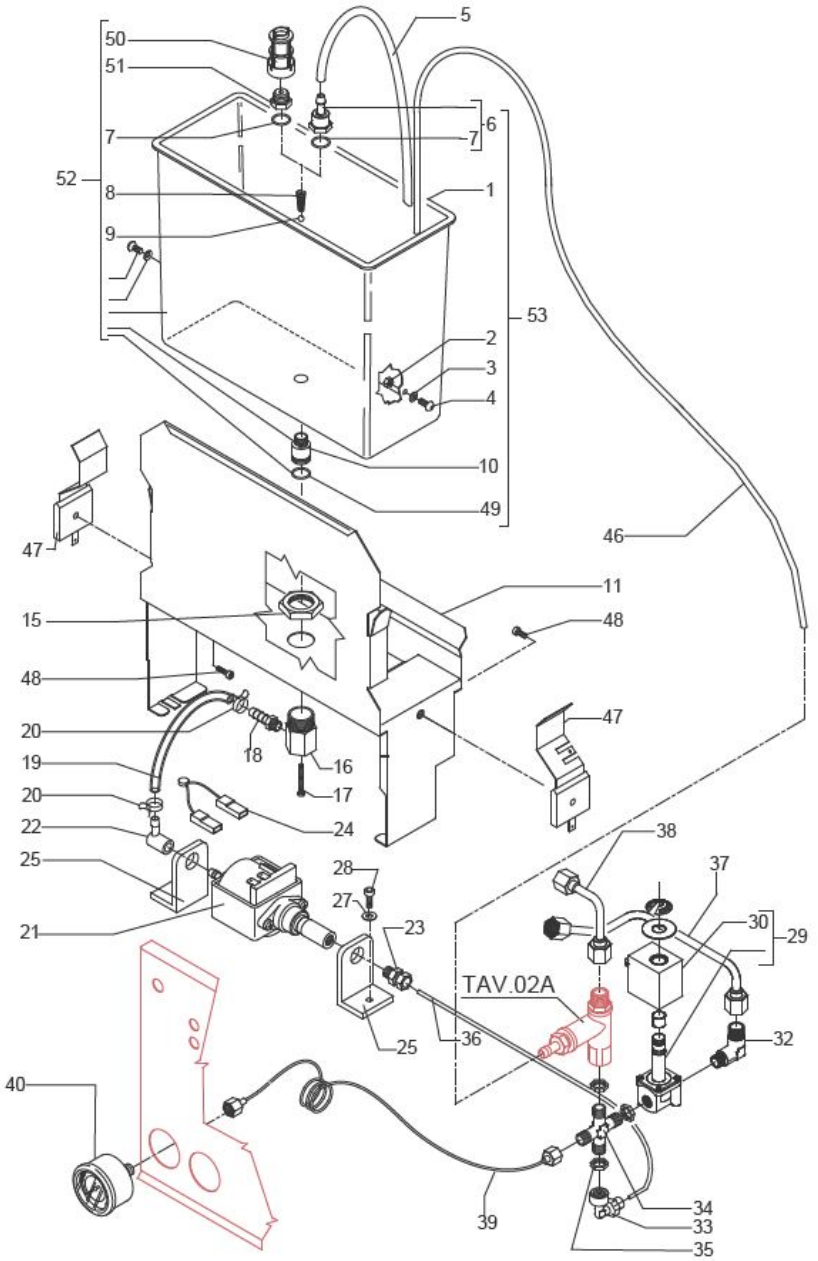

TABLE 2 - (up to 10/03/2019)
MAG1S

POS	CODE	DESCRIPTION
29	7702415.01	EV.2WAY OLAB 240V 25BAR SMALL COIL
32	5301504AL	ELBOW FITTING M12X1/8"G OT57USA
33	7303034TR	UNION ELBOW 1/8"
34	7304545TR	CROSS FITTING 1/8"G
35	5221844	NUT 1/8"
36	5194590	PUMP-SOLENOID VALVE HOSE
37	5162237.01LL	BOILER LOAD HOSE
38	5162236.01LL	SURPRESSION VALVE - HEAT EXCHANGER HOSE
39	7400902	PUMP PRESSURE GAUGE CAPILLARY
40	7432523	PRESSURE GAUGE D40 16BAR
46	5194592	DRAIN HOSE SURPRESSION VALVE
47	5471535	TANK SUPPORT SHAPED SPRING
48	7809806	SCREW TC M 3,5X8 PLASTITE
49	7496076	OR GASKET 112 EPDM 70SH
50	7374002	FILTER 1/4"
51	5302065.01AL	REDUCTION GEAR 1/4"
52	5963070.05	ASSEMBLY TANK WITH FILTER
53	5963071.05	ASSEMBLY TANK WITH RUBBER-HOLDER

BEZZERA MAGICA

TABLE 2 - (up to 10/03/2019)
MAG1S

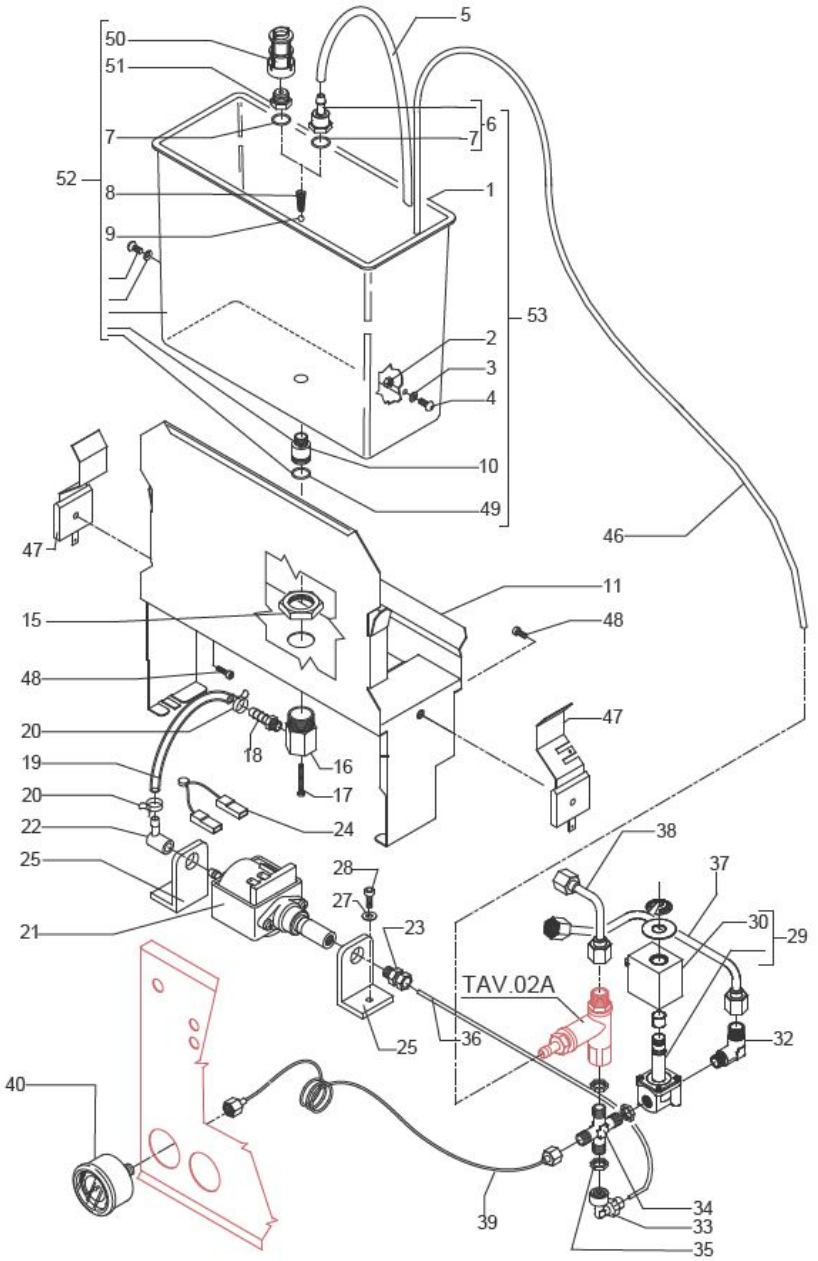

TABLE 2 - (from 11/03/2019)

POS	CODE	DESCRIPTION
1	7373006.04R	TANK 4LT WITH HOLES
2	7812001	CAP NUT M4 STAINLESS STEEL
3	7374004	WASHER D4 NYLON
4	7819912	SCREW M4X6
5	5194540	HOSE 8X5 L=300 SILICONE
6	5224414.01AL	RUBBER-HOLDER D7,5
7	7496073.01	OR GASKET 115 EP856
8	5471521.01	COUPLING SPRING
9	5471509	BALL 7/32
10	5224617AL	GASKET-HOLDER D14.5 X 25 OT
11	5963009.03	ASSEMBLY TANK SUPPORT
15	5221830	NUT M20 H5 OT
16	5225228.01AL	FITTING M20 H28.5 OT
17	7826206	SCREW TCI M3X30 UNI 6107 OT
18	5225246AL	FITTING 1/8
19	5194529	CRISTAL HOSE D6 X 9 L=150MM
20	7611512	CLAMP
21	7731025.01	VIBRATION PUMP OL PLUS 100V 50/60HZ
21	7731024.01	VIBRATION PUMP OL PLUS 120V 60HZ
21	7731026.01	VIBRATION PUMP OL PLUS 220V 50/60HZ
21	7731023.01	VIBRATION PUMP OL PLUS 230V 50HZ
21	7731027.01	VIBRATION PUMP OL PLUS 240V 50HZ
22	7303006	RUBBER-HOLDER FITTING
23	7303057	STRAIGHT FITTING BODY M1/8"
24	7634816	THERMIC SAFETY DEVICE 100°C AUTOMATIC
25	7470602	VIBRATION-DAMPING
27	7815003	PLAIN WASHER D5 UNI 6592 A2
28	7816004	SCREW TCEI M4 X 16
29	7701123.01	EV.2 WAY 110V 25BAR SMALL COIL
29	7702322.01	EV.2 WAY OLAB 220/230V 25BAR SMALL COIL

BEZZERA **MAGICA**

TABLE 2 - (from 11/03/2019)

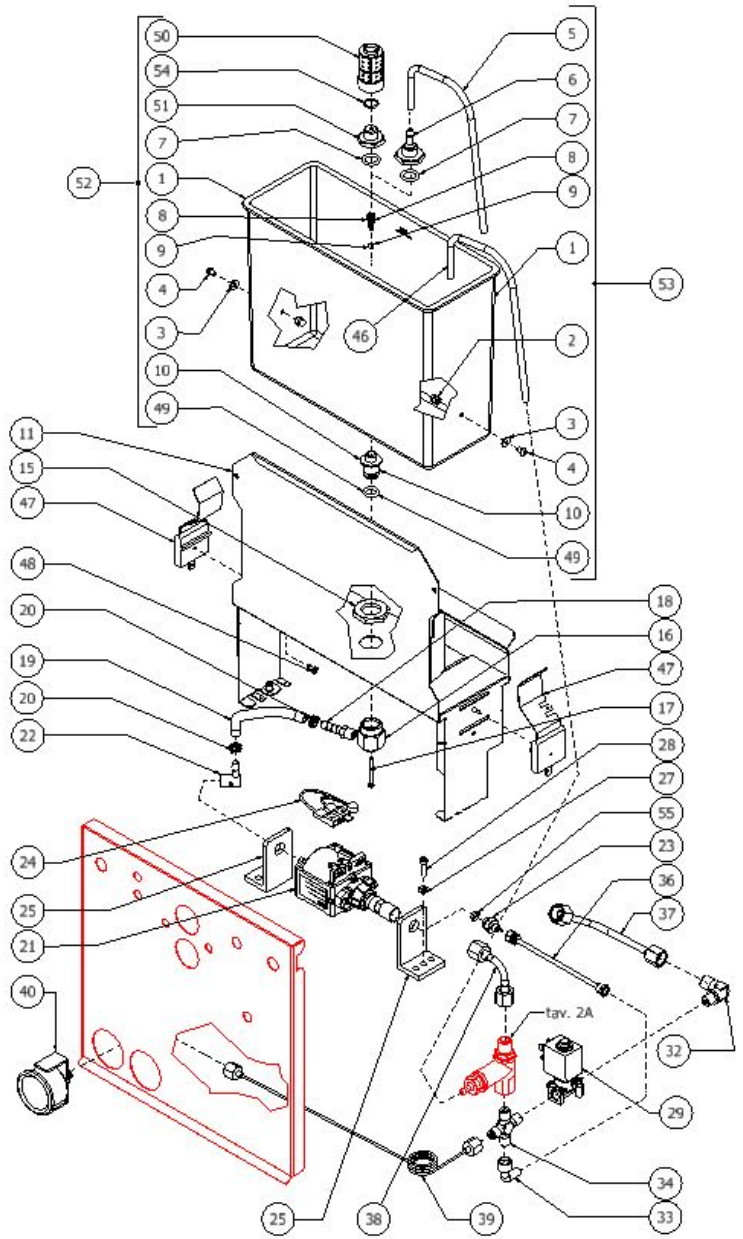

TABLE 2 - (from 11/03/2019)

POS	CODE	DESCRIPTION
29	7702415.01	EV.2 WAY 240V 25BAR SMALL COIL
32	5301504AL	ELBOW FITTING M12X1/8
33	7303063TR	ELBOW FITTING BODY 1/8"
34	7304545TR	CROSS FITTING 1/8
36	5194590.01LL	ASSY PTFE PIPE 4X140
37	5162497LL	BOILER LOAD PIPE
38	5162236.01LL	SURPRESSION VALVE - HEAT EXCHANGER
39	7400909	PUMP CAPILLARY
40	7432523	PRESSURE GAUGE D40 16BAR
46	5194592	DRAIN HOSE SURPRESSION VALVE
47	5471535	TANK SUPPORT SHAPED SPRING
48	7809806	SCREW TC M 3,5X8 PLASTITE
49	7496076	OR GASKET 112 EPDM 70SH
50	7374002	FILTER 1/4
51	5302065.01AL	TANK FILTER REDUCTION OT57USA
52	5963070.05	ASSY TANK WITH FILTER
53	5963071.05	ASSY TANK W/RUBBER HOLDER
54	7496101	RED OR GASKET 11X1.5 SILICON 70SH
55	7496023	GASKET OR 106 VITON

BEZZERA **MAGICA**

TABLE 2 - (from 11/03/2019)

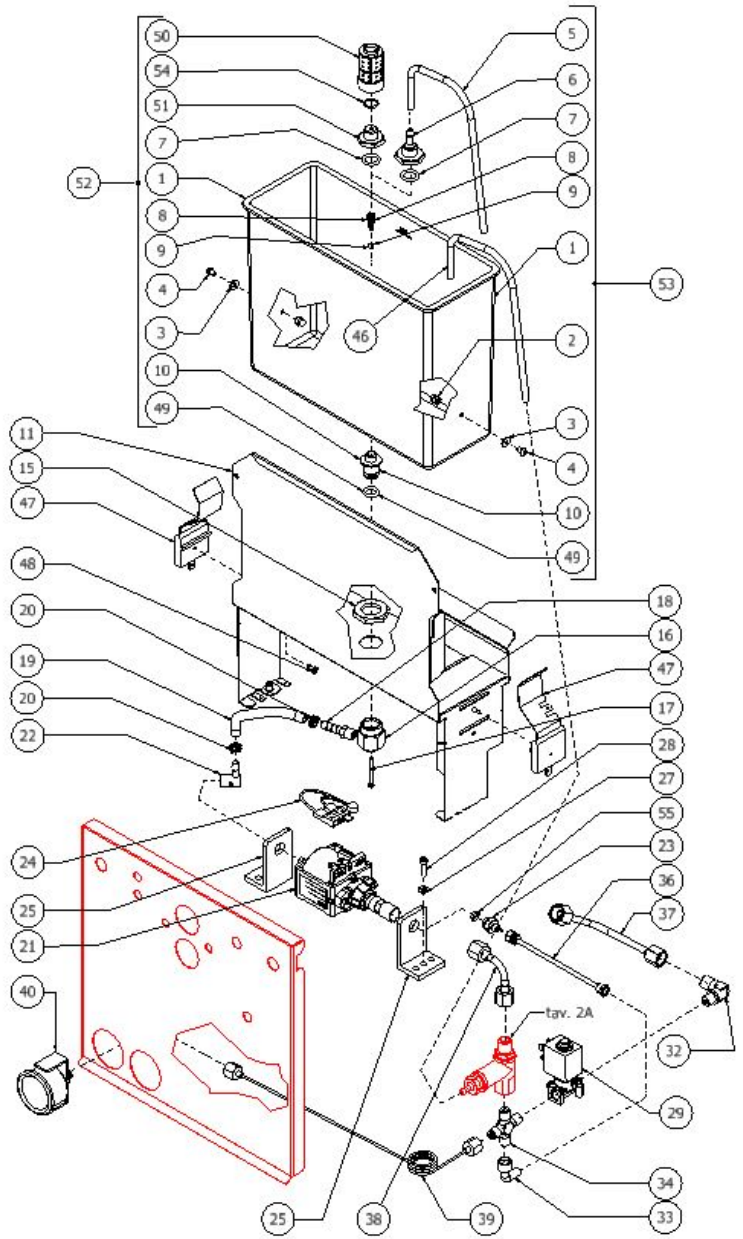

TABLE 2A - (up to 30/10/2012)
MAG1S

POS	CODE	DESCRIPTION
1	5302072	RUBBER-HOLDER FITTING
2	5471506.01	CALIBRATED SPRING D1 H26 AISI 302
3	7496052	OR GASKET 114
4	5224619AL	GASKET-HOLDER
5	7496018	OR GASKET 105 VITON
6	5965212.01AL	ASSY OPV ADJUST. 9/12 BAR
7	5224615AL	GASKET-HOLDER
8	5471505	SPRING
9	5302017AL	STRAIGHT FITTING M12 H26.5 OT
10	5965212.01AL	ASSY OPV ADJUST. 9/12 BAR
11	5493001	GASKET D8 X 4 EPT 70SH

BEZZERA **MAGICA**

TABLE 2A - (up to 30/10/2012)
MAG1S

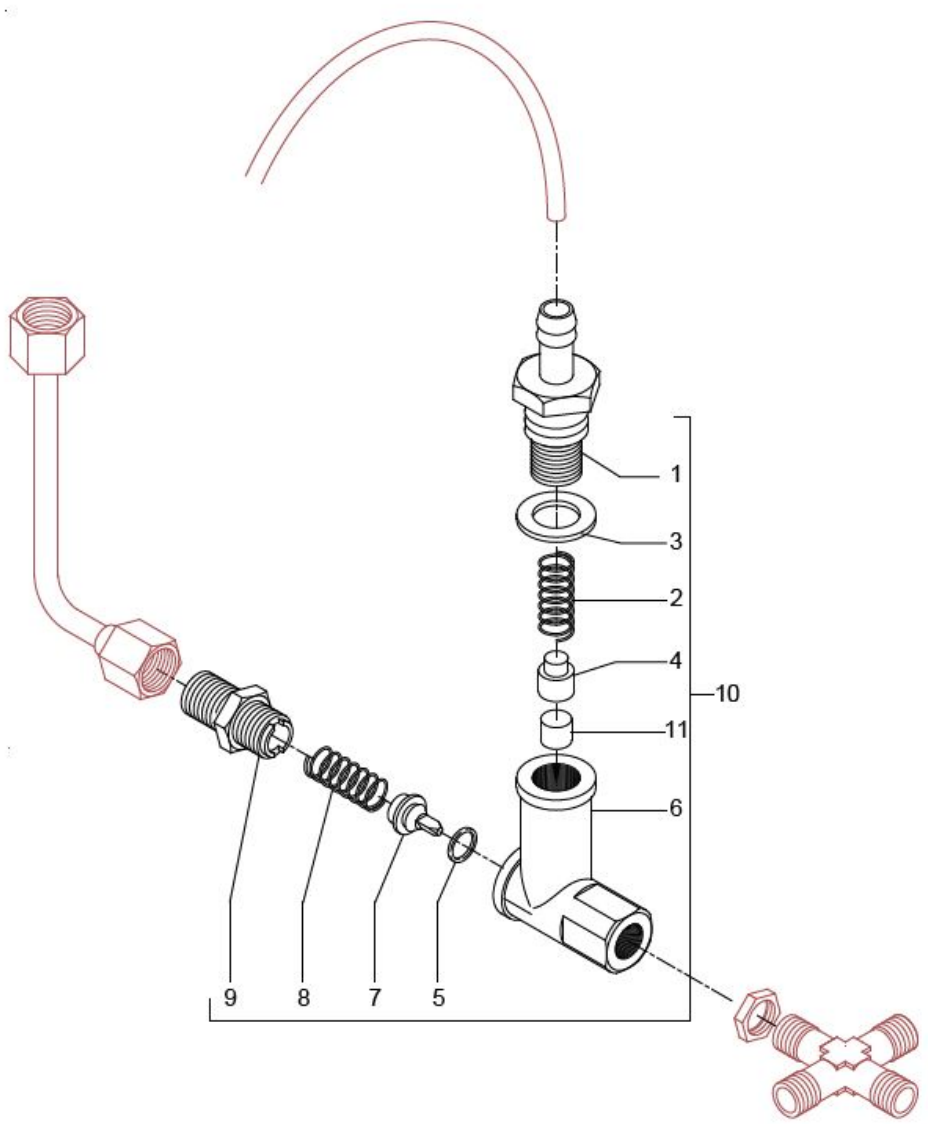

TABLE 2A - (from 31/10/2012)
MAG1S

POS	CODE	DESCRIPTION
1	5302077AL	RUBBER-HOLDER FITTING
2	5471539	CALIBRATED SPRING D.1,6
3	7496052	OR GASKET 114
4	5224620AL	GASKET-HOLDER
5	7496018	OR GASKET 105 VITON
6	5283053TP	SURPRESSION VALVE BODY
7	5224615AL	GASKET-HOLDER
8	5471505	SPRING
9	5302017AL	STRAIGHT FITTING M12 H26.5
10	5965212.01AL	ASSEMBLY SURPRESSION VALVE 12BAR
11	5493042	GASKET D.11X3
12	5471019	INOX WIRE FILER D8,5X5 AISI304

BEZZERA MAGICA

TABLE 2A - (from 31/10/2012)
MAG1S

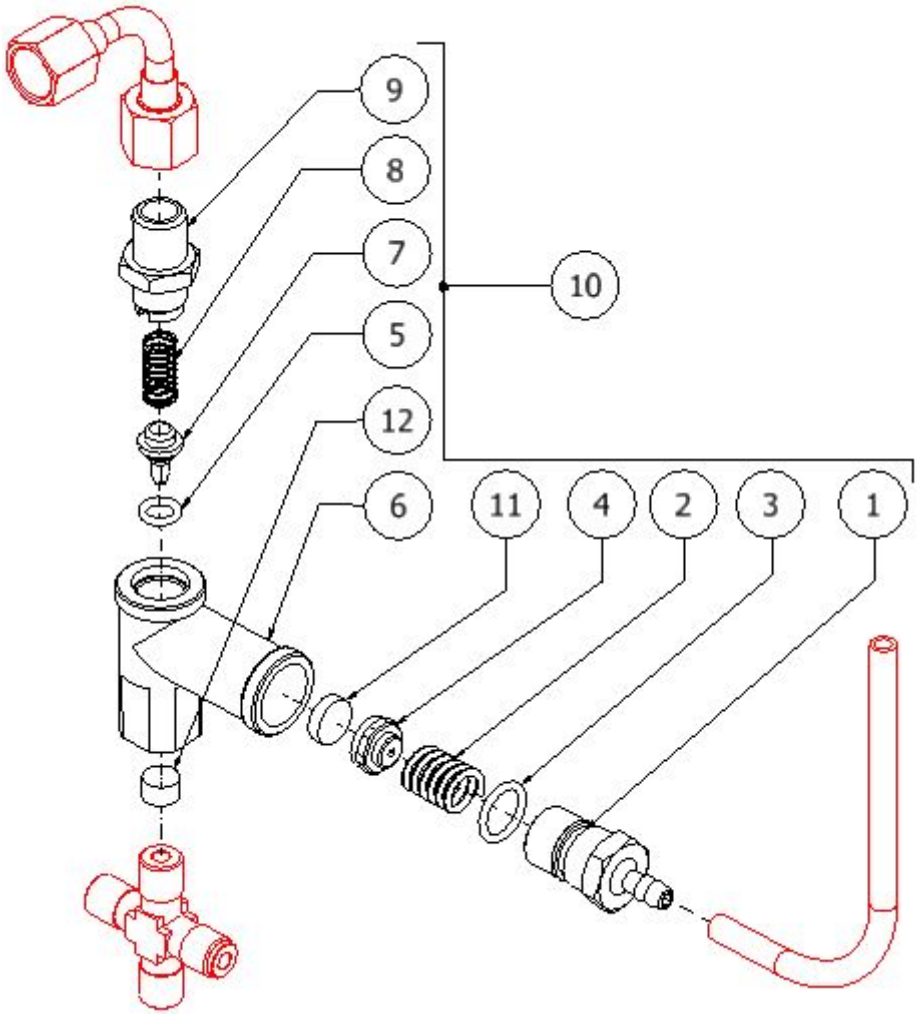

TABLE 3 - (up to 18/03/2021)
MAG1S

POS	CODE	DESCRIPTION
1	7432522	PRESSURE GAUGE D40 3BAR
2	7400908	PRESSURE GAUGE CAPILLARY
2	7400910	BOILER CAPILLARY PID VERSION
3	5162234LL	STEAM TAP HOSE
3	5162395LL	STEAM TAP HOSE
4	5225412AL	FITTING
4	5302005AL	STRAIGHT FITTING 3/8
5	5265819	LEVEL PROBE D3 X 80 X 6.3
6	5265812	MINIMUM LEVEL PROBE D3 X 110 X 4.8
7	5225205	STRAIGHT FITTING M10 OT
8	5192001	PROBE SHEATH D8 X 45 HOLE D3 PTFE
9	7452511.01	ANTI-PRESSURE VALVE RC OT + TF
11	5162239.02LL	VALVE HOSE
12	7452510.02R	ASSEMBLY SAFETY VALVE
13	5162233LL	WATER TAP HOSE
14	7433013	PRESSOSTAT XP/100 1/4
15	5162235R	PRESSURE SWITCH HOSE
18	5320501.02BL	ASSEMBLY BOILER POLISHED
19	7434009	THERMOSTAT MANUAL 16A 135°C
20	5227007	DOWEL M8 X 6 HOLE M4
21	5492008	GASKET D10.5 X 2
22	5221813	CAP NUT M12
23	5492025	GASKET D42x32x2 PTFE
24	5721127AL	HEATING ELEMENT 1350 110V
24	5722240.01AL	HEATING ELEMENT COPPER 220/240V - 1250/1450W
25	5163204LL	BOTTOM HEATING HOSE
26	5164067.01LL	UPPER HEATING HOSE
27	5329020DC-AL	EXCHANGER 3 HOLES
28	5495007	GASKET D32 X 3 BRASS
29	5301521TR	UNION ELBOW 1/8

BEZZERA MAGICA

TABLE 3 - (up to 18/03/2021)
MAG1S

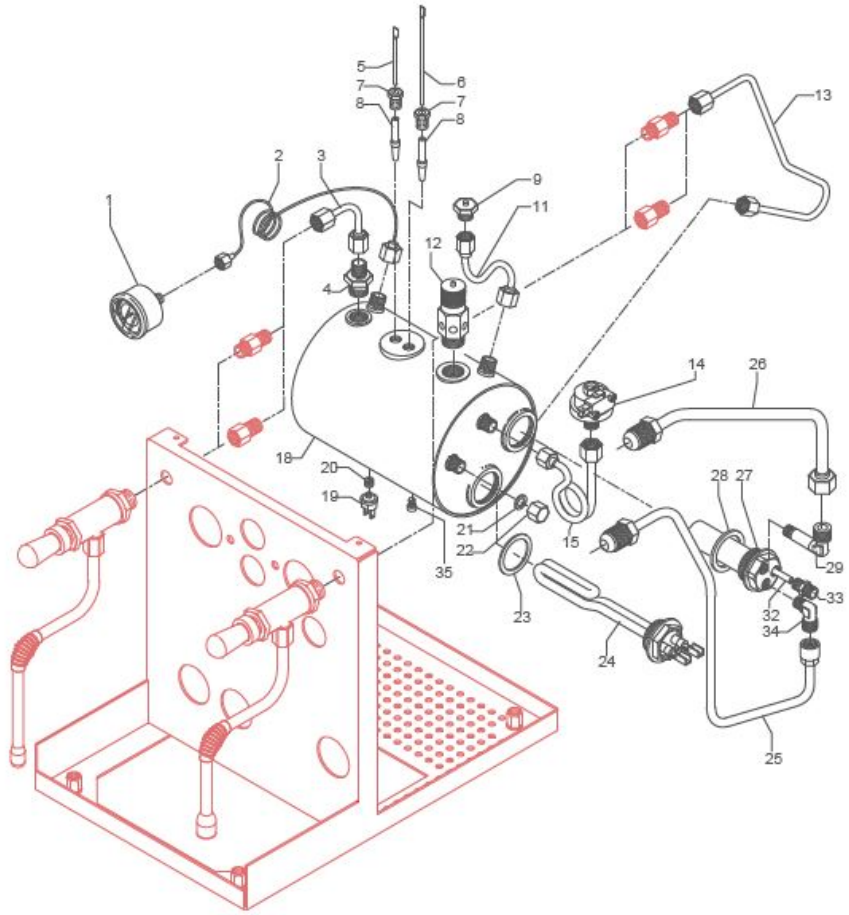

TABLE 3 - (up to 18/03/2021)
MAG1S

POS	CODE	DESCRIPTION
32	5192301	SUCTION HOSE D6 L=130MM PTFE
33	5302006AL	STRAIGHT FITTING 1/8"
34	5301520TR	UNION ELBOW 1/8"
35	5227012	SCREW TE M8X7.5

BEZZERA **MAGICA**

TABLE 3 - (up to 18/03/2021)
MAG1S

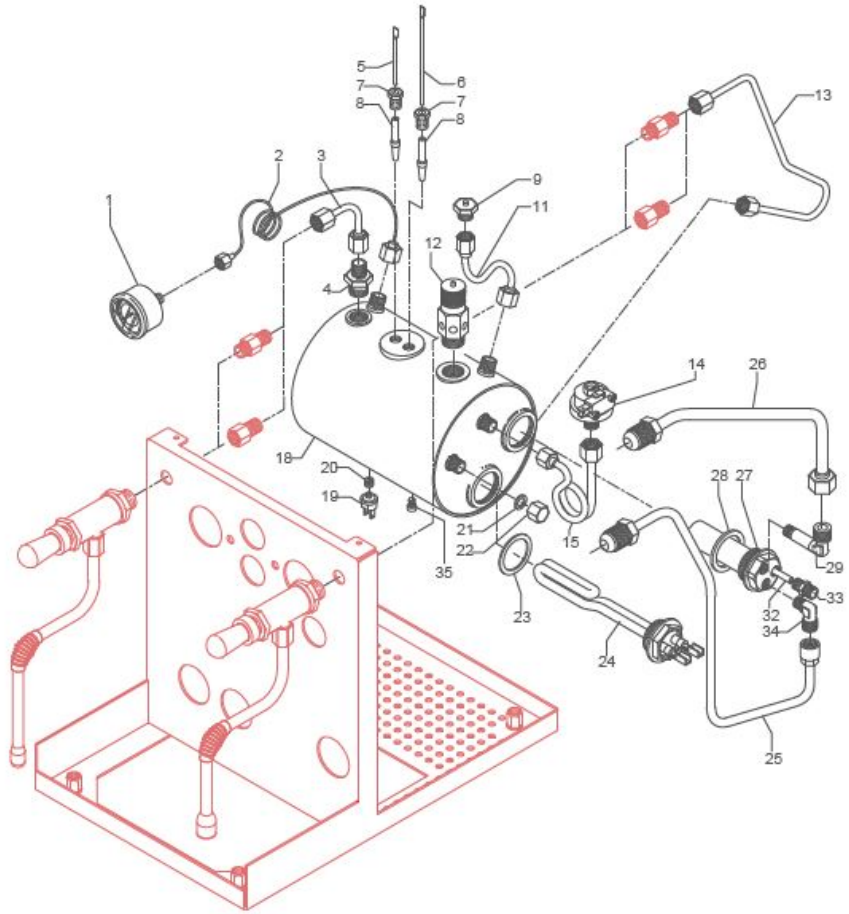

TABLE 3 - (from 19/03/2021 up to 06/10/2025)
MAG1S

POS	CODE	DESCRIPTION
1	7432522	PRESSURE GAUGE D40 3BAR
2	7400908	BOILER CAPILLARY
2	7400910	BOILER CAPILLARY PID VERSION
3	5900035	STEAM HOSE AND FITTING KIT – STREGA MAGICA MITICA BZ16
3	5900037	STEAM HOSE AND FITTING KIT – MAGICA PID/MITICA TOP
4	5302005AL	STRAIGHT FITTING 3/8
4	5225412AL	FITTING FOR TEMPERATURE PROBE
5	5265826	LEVEL PROBE
7	5225205	STRAIGHT FITTING M10 OT
8	5192001	PROBE SHEATH D8 X 45 HOLE D3 PTFE
9	7452511.01	ANTI-PRESSURE VALVE RC OT + TF
11	5162239.02LL	VALVE HOSE
12	7452510.02R	ASSEMBLY SAFETY VALVE
13	5900036	WATER HOSE AND FITTING KIT – MAGICA MITICA BZ16 S/R PM
14	7433013	PRESSOSTAT XP/100 1/4
15	5162235.01LL	PRESSURE SWITCH HOSE
18	5320501.02BL	ASSEMBLY BOILER POLISHED
19	7434009	THERMOSTAT MANUAL 16A 135°C
20	5227007	DOWEL M8 X 6 HOLE M4
21	5492008	GASKET D10.5 X 2
22	5221813	CAP NUT M12
23	5492025	GASKET D42x32x2 PTFE
24	5721127AL	COPPER HEATING ELEMENT 110V 1350W
24	5722240.01AL	HEATING ELEMENT 220/240V-1250/1450W OT60
25	5163204LL	BOTTOM HEATING HOSE
26	5164067.01LL	UPPER HEATING HOSE
27	5329020DC-AL	EXCHANGER 3 HOLES
28	5495007	GASKET D32 X 3 BRASS
29	5301521TR	UNION ELBOW 1/8
32	5192301	SUCTION HOSE D6 L=130MM PTFE

BEZZERA MAGICA

TABLE 3 - (from 19/03/2021 up to 06/10/2025)
MAG1S

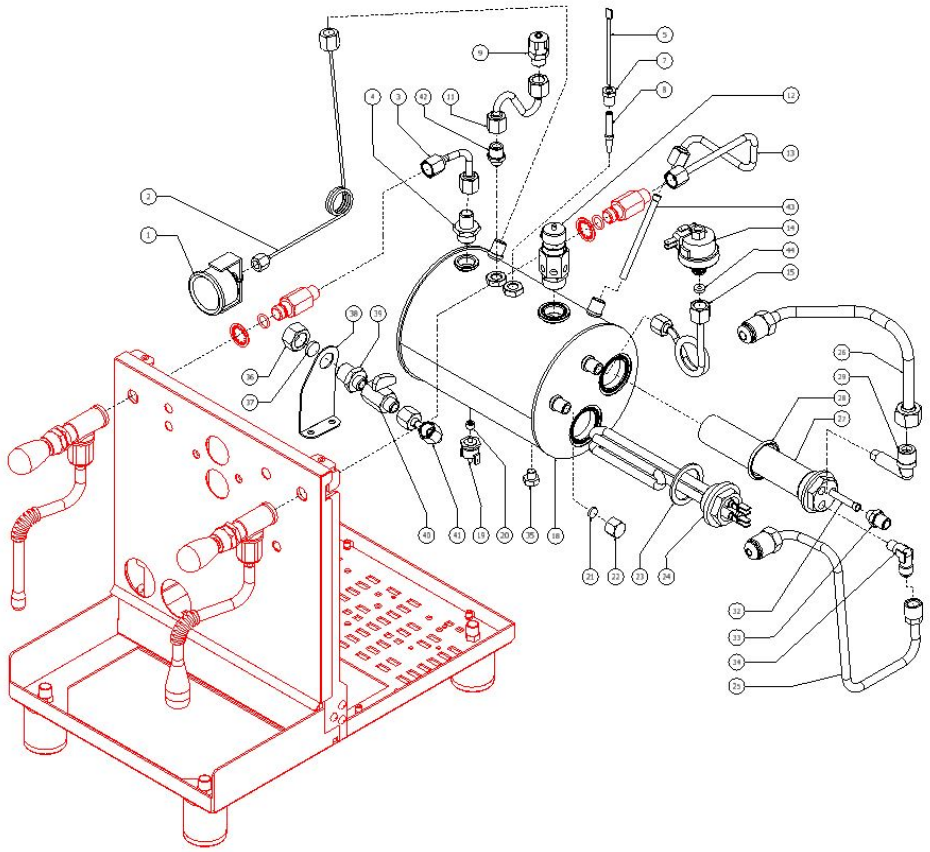

TABLE 3 - (from 19/03/2021 up to 06/10/2025)
MAG1S

POS	CODE	DESCRIPTION
33	5302006AL	STRAIGHT FITTING 1/8
34	5301520TR	UNION ELBOW 1/8
35	5227012	SCREW TE M8X7.5
36	5221819	CAP NUT 3/8
37	5492011	GASKET D15X3 ASBESTOS FREE
38	5058505LL	BOILER DRAIN SUPPORT W/COMPASSES
39	5302035AL	FITTING 3/8
40	7451504	BALL VALVE MINIBALL 1/4
41	5162498LL	BOILER DRAIN PIPE
42	5302092AL	FITTING M13-M10
43	5192325	DRAW OUT D6X1
44	5492028	GASKET D10.5X4X3

BEZZERA MAGICA

TABLE 3 - (from 19/03/2021 up to 06/10/2025)
MAG1S

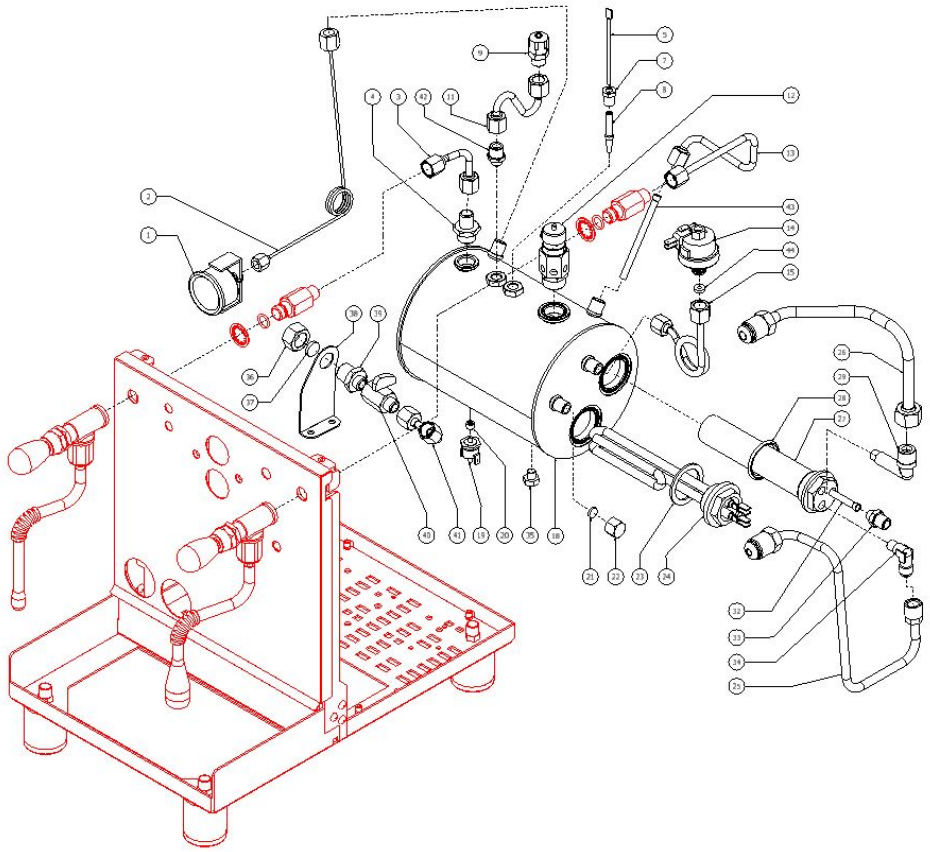

TABLE 3 - (from 07/10/2025)
MAG1S

POS	CODE	DESCRIPTION
1	7432522	PRESSURE GAUGE D40 3BAR
2	7400908	BOILER CAPILLARY
2	7400910	BOILER CAPILLARY PID VERSION
3	5162234.01LL	STEAM TAP HOSE
3	5162395.01LL	STEAM TAP HOSE
4	5302005AL	STRAIGHT FITTING 3/8
4	5225412AL	FITTING FOR TEMPERATURE PROBE
5	5265826	LEVEL PROBE
7	5225205	STRAIGHT FITTING M10 OT
8	5192001	PROBE SHEATH D8 X 45 HOLE D3 PTFE
9	7452511.01	ANTI-PRESSURE VALVE RC OT + TF
11	5162239.02LL	VALVE HOSE
12	7452510.02R	ASSEMBLY SAFETY VALVE
13	5162496.01LL	WATER PIPE
14	7433013	PRESSOSTAT XP/100 1/4
15	5162235.01LL	PRESSURE SWITCH HOSE
18	5320501.02BL	ASSEMBLY BOILER POLISHED
19	7434009	THERMOSTAT MANUAL 16A 135°C
20	5227007	DOWEL M8 X 6 HOLE M4
21	5492008	GASKET D10.5 X 2
22	5221813	CAP NUT M12
23	5492025	GASKET D42x32x2 PTFE
24	5721127AL	COPPER HEATING ELEMENT 110V 1350W
24	5722240AL-HT	HEATING ELEMENT 220/240V-1250/1450W OT60
25	5163204LL	BOTTOM HEATING HOSE
26	5164067.01LL	UPPER HEATING HOSE
27	5329020DC-AL	EXCHANGER 3 HOLES
28	5495007	GASKET D32 X 3 BRASS
29	5301521TR	UNION ELBOW 1/8
32	5192301	SUCTION HOSE D6 L=130MM PTFE

BEZZERA **MAGICA**

TABLE 3 - (from 07/10/2025)
MAG1S

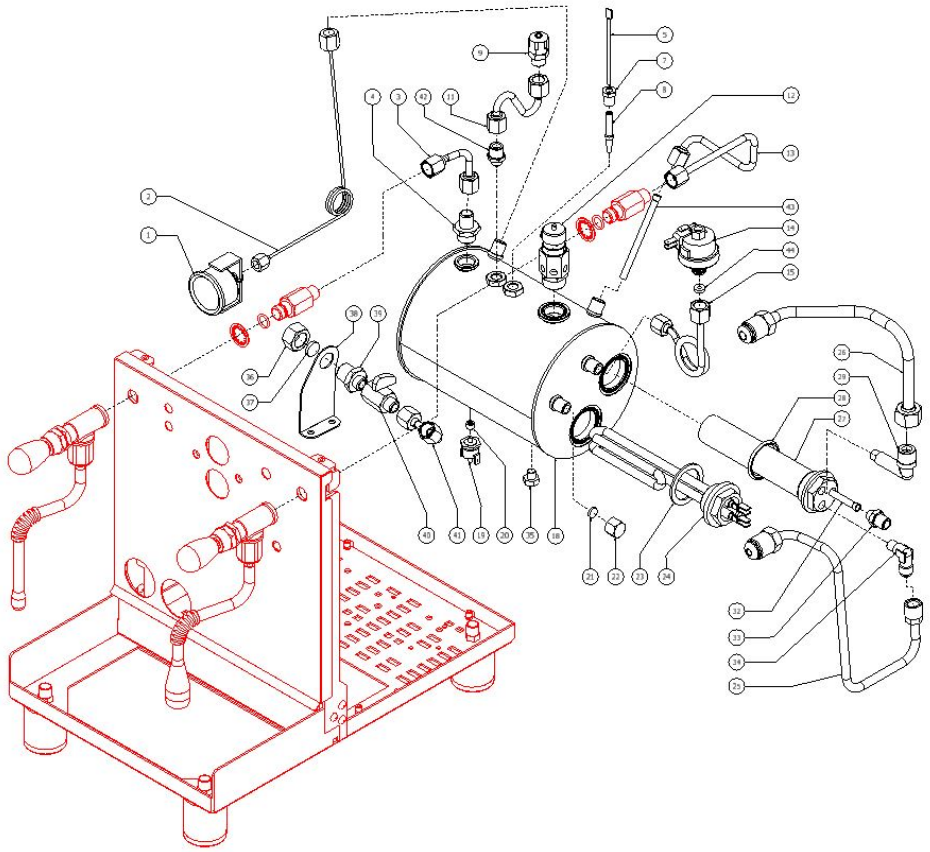

TABLE 3 - (from 07/10/2025)
MAG1S

POS	CODE	DESCRIPTION
33	5302006AL	STRAIGHT FITTING 1/8
34	5301520TR	UNION ELBOW 1/8
35	5227012	SCREW TE M8X7.5
36	5221819	CAP NUT 3/8
37	5492011	GASKET D15X3 ASBESTOS FREE
38	5058505LL	BOILER DRAIN SUPPORT W/COMPASSES
39	5302035AL	FITTING 3/8
40	7451504	BALL VALVE MINIBALL 1/4
41	5162498LL	BOILER DRAIN PIPE
42	5302092AL	FITTING M13-M10
43	5192325	DRAW OUT D6X1
44	5492028	GASKET D10.5X4X3

BEZZERA **MAGICA**

TABLE 3 - (from 07/10/2025)
MAG1S

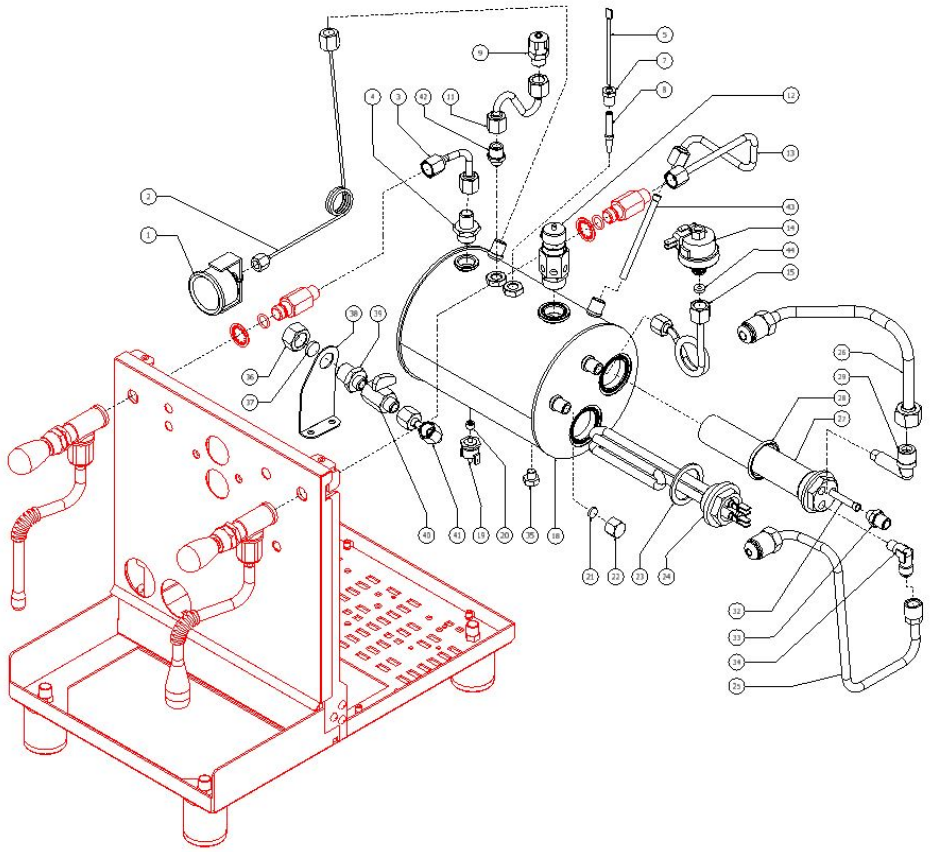

TABLE 4 - (up to 28/01/2014)
MAG1S

POS	CODE	DESCRIPTION
1	7371511.01	LEVER KNOB
2	5262801	FERRULE 3/8"G H17 STAINLESS STEEL
3	5225610	ARTICULATED JOINT M8
4	5260204DL	SHAFT D12X47
5	5471513	SPRING
6	5261801	WASHER D11
7	7496072	OR GASKET 121
8	5471532.01	SPRING FOR ARTICULATION
9	5190501	COMPLETE CUP
10	7479990.03	STEAM TUBE TERMINAL 2 HOLES SPHERE
11	7479985R	ASSEMBLY WATER HOSE
12	5494004	GASKET D12 X 6 PTFE GRAPHITIZED
13	5964085.02AL	BZ07 TAP COMPLETE WITHOUT HOOKING
14	5221826CM	NUT 3/8
15	5283047R	TAP BODY 3/8"GXM14
16	7479952DL	UPPER ASSY PLUG
17	7479953	GASKET TF 22X17X2
18	7479954	INOX FILTER D8,5X22
19	7479955.01	INJECTOR CH7X9 M6X0.75 HOLE 0.7
20	7479956.01	UPPER SLEEVE ASSY
21	7479933.01	INJECTOR 0,7 UPPER SLEEVE ASSY
22	7479934	GASKET OR 128 VITON
23	7479935	GASKET TF D35X30X2
24	7479936	DELIVERY VALVE SPRING
25	7479937	DELIVERY VALVE ASSY
26	7479940AL	DELIVERY GROUP BODY
27	7493011	INSULATING
28	5267013	TIE ROD M8 X 31 ASTM A193
29	7811402	NUT M8 UNI5587 A2
30	7479938	GASKET TF D10X6X1

BEZZERA **MAGICA**

TABLE 4 - (up to 28/01/2014)
MAG1S

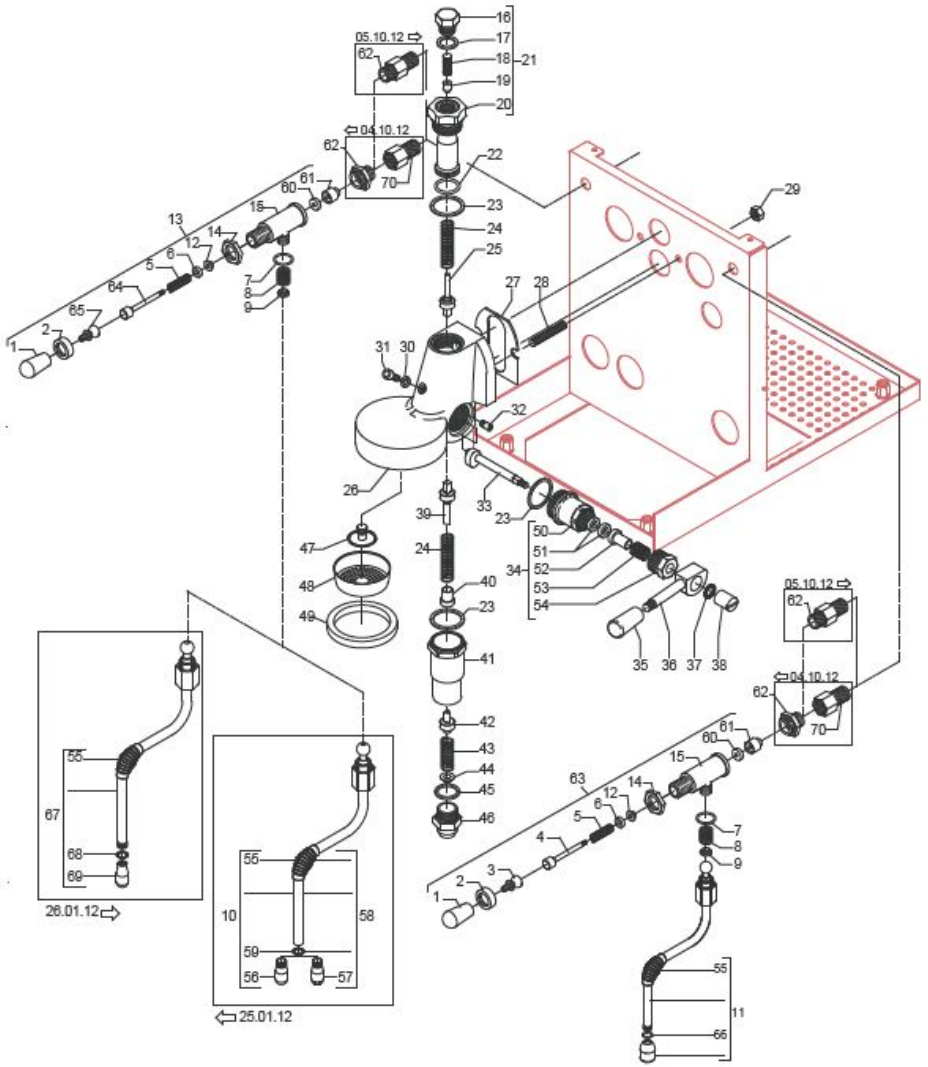

TABLE 4 - (up to 28/01/2014)
MAG1S

POS	CODE	DESCRIPTION
31	7479939	SCREW TCE M6X8
32	7479951	CAM STOP PIN
33	7479950	CAM SHAFT
34	7479949	CAM FLANGE ASSY
35	7371511.01	LEVER KNOB
36	7479931	DELIVERY LEVER
37	7479947	WASHER D8
38	7479948	CAP D15XM6
39	7479946	ASSEMBLY VALVE
40	7479942	SPRING GUIDE BUSHING
41	7479957	LOWER SLEEVE ASSY
42	7479943	ASSEMBLY RELIEF VALVE
43	7479944	DRAIN SPRING
44	7479945	JET-BREAKER BUSHING D15X6
45	7479960	GASKET TF D26x21x2
46	7479961	GROUP BOTTOM FITTING
47	7479941	SPRAYER D30
48	5471022	SHOWER FILTER
49	5493039	UNDERCUP GASKET
50	7479967	CAM FLANGE
51	7479968	WASHER EP709 15,5X7,5X4
52	7479969	BUSHING
53	7479970	SPRING
54	7479971	PLUG CHROMED
55	7371003	INSULATING
56	7305010	TERMINAL 4 HOLES
57	7305013	TERMINAL 2 HOLES
58	7479990.03	ASSEMBLY STEAM HOSE TERMINAL 2 HOLES
59	7496083	OR GASKET D4.5X1.5 NBR 70
60	5496042	GASKET D11X4X4 EPT 70 (C6)

BEZZERA MAGICA

TABLE 4 - (up to 28/01/2014)
MAG1S

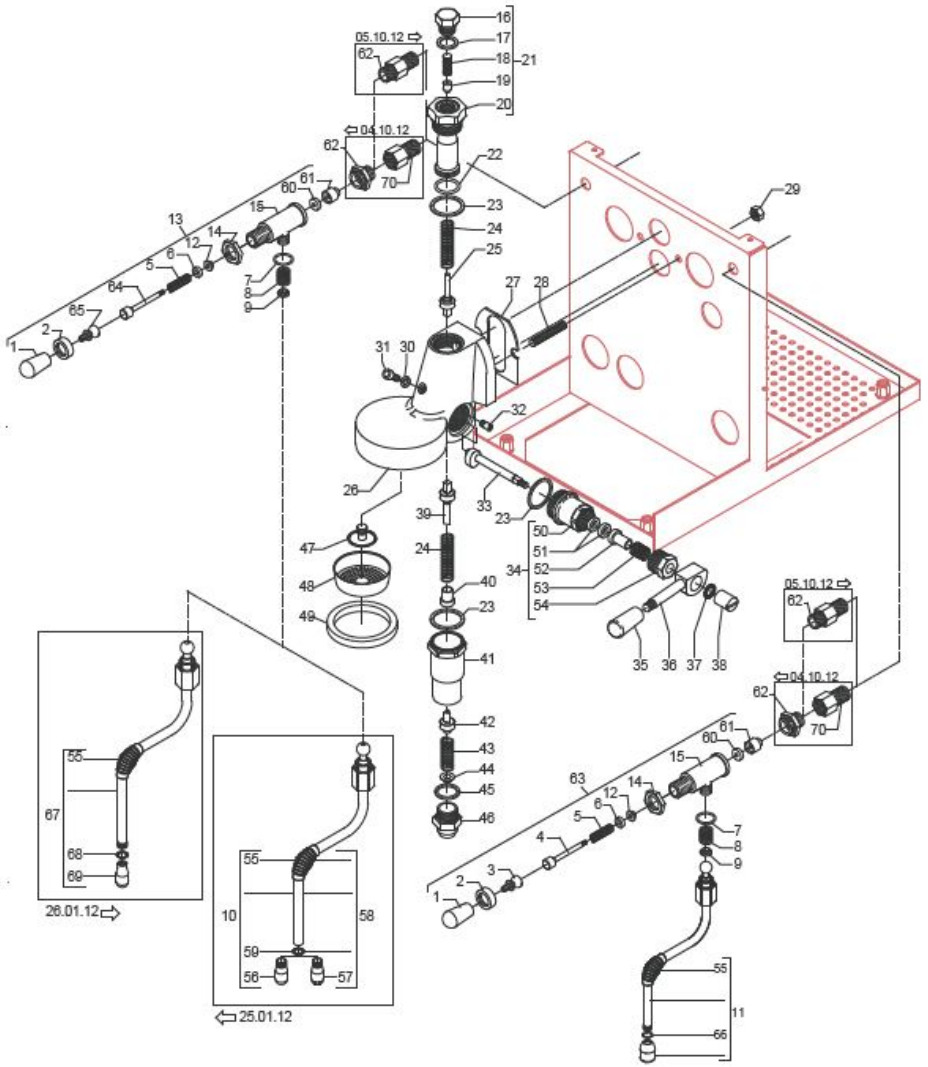

TABLE 4 - (up to 28/01/2014)
MAG1S

POS	CODE	DESCRIPTION
61	5224603AL	GASKET-HOLDER
62	5225416.01AL-R	FITTING M14XM13 H26
63	5964085.02AL	ASSEMBLY TAP
64	5260204DL	SHAFT D12X47
65	5225610	ARTICULATION M8 INOX
66	7496084	GASKET
67	7479990.03	ASSEMBLY STEAM HOSE TERMINAL 2 HOLES
68	7496084	GASKET
69	7305014	TERMINAL 2 HOLES
70	5302064	FITTING M/F M13x1

BEZZERA MAGICA

TABLE 4 - (up to 28/01/2014)
MAG1S

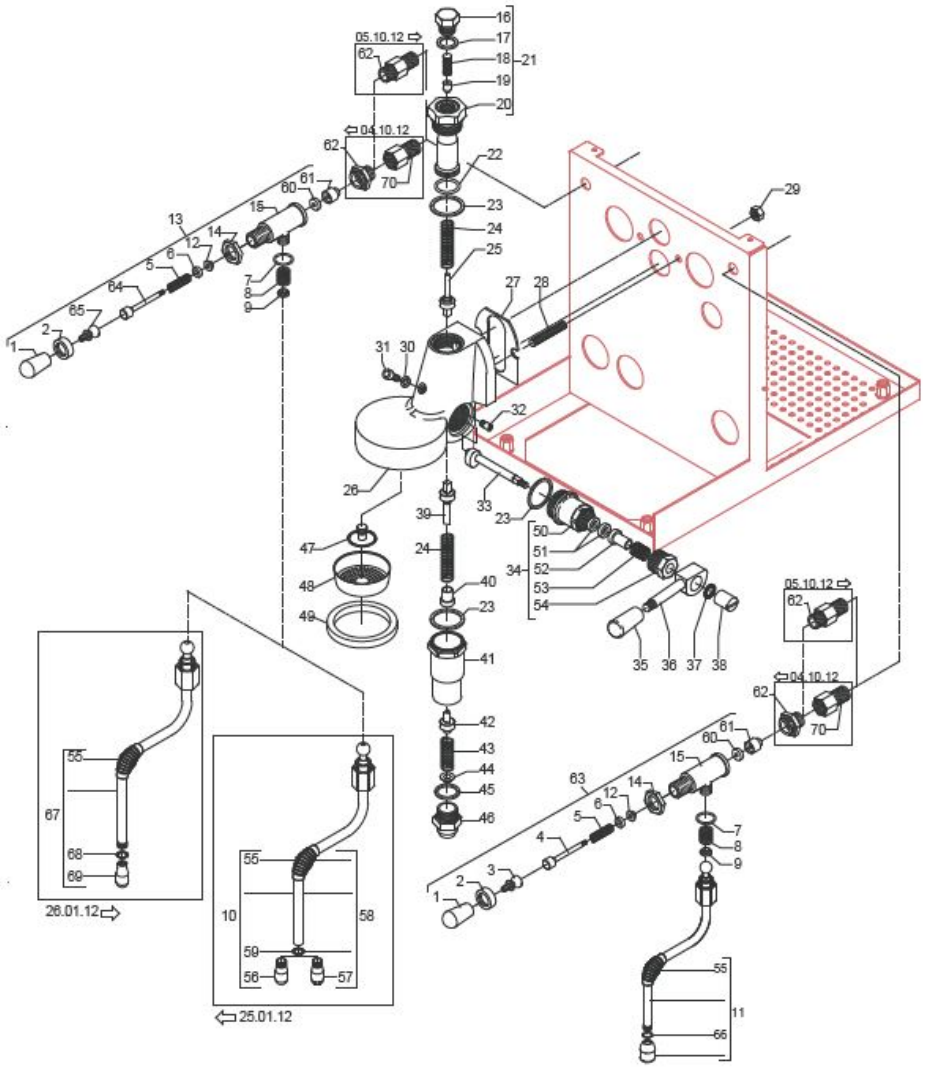

TABLE 4 - (from 29/01/2014 up to 08/11/2018)
MAG1S

POS	CODE	DESCRIPTION
1	7371511.01	LEVER KNOB
2	5262801.01	FERRULE 3/8"G H17 STAINLESS STEEL
3	5225610	ARTICULATION M8 INOX
4	5260204DL	SHAFT D12X47
5	5471513	SPRING
6	5261801	WASHER D11
7	7496072	OR GASKET 121
8	5471532.01	SPRING FOR ARTICULATION
9	5190501	COMPLETE CUP
11	7479985R	ASSEMBLY WATER HOSE
12	5494004	GASKET D12 X 6 PTFE GRAPHITIZED
13	5964085.02AL	ASSEMBLY TAP WITH OR
14	5221826CM	NUT 3/8
15	5283055TW	TAP BODY OT FOR OR
16	7479952DL	UPPER ASSY PLUG
17	7479953	GASKET TF 22X17X2
18	7479954	INOX FILTER D8,5X22
19	7479955	INJECTOR M6X0,75 FORO D0,7
20	7479956.01	UPPER SLEEVE ASSY
21	7479933.01	INJECTOR D0.7 UPPER SLEEVE ASSY
22	7479934	GASKET OR 128 VITON
23	7479935	GASKET TF D35X30X2
24	7479936	DELIVERY VALVE SPRING
25	7479937	DELIVERY VALVE ASSY
26	7479940AL	DELIVERY GROUP BODY
27	7493011	INSULATING
28	5267013	TIE ROD M8 X 31 ASTM A193
29	7811402	NUT M8 UNI5587 A2
30	7479938	GASKET TF D10X6X1
31	7479939	SCREW TCE M6X8

BEZZERA MAGICA

TABLE 4 - (from 29/01/2014 up to 08/11/2018)
MAG1S

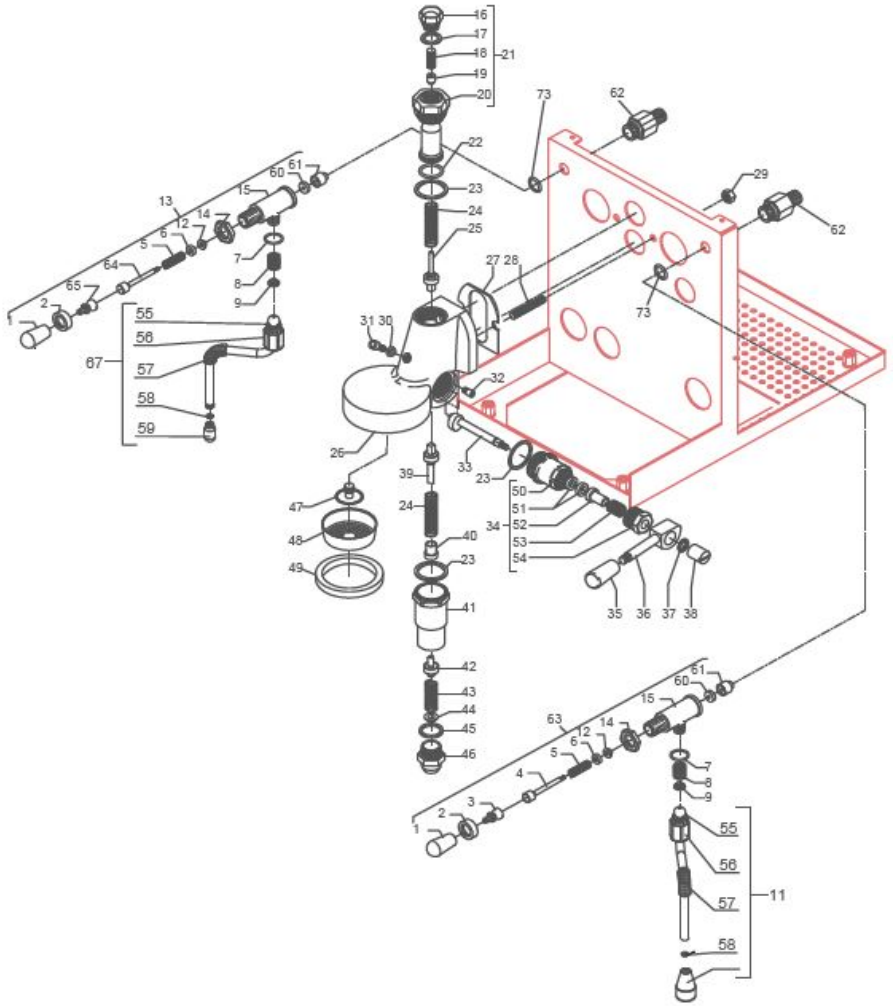

TABLE 4 - (from 29/01/2014 up to 08/11/2018)
MAG1S

POS	CODE	DESCRIPTION
32	7479951	CAM STOP PIN
33	7479950	CAM SHAFT
34	7479949	CAM FLANGE ASSY
35	7371511.01	LEVER KNOB
36	7479931	DELIVERY LEVER
37	7479947	WASHER D8
38	7479948	CAP D15XM6
39	7479946	ASSEMBLY VALVE
40	7479942	SPRING GUIDE BUSHING
41	7479957	LOWER SLEEVE ASSY
42	7479943	ASSEMBLY RELIEF VALVE
43	7479944	DRAIN SPRING
44	7479945	JET-BREAKER BUSHING D15X6
45	7479960	GASKET TF D26x21x2
46	7479961	GROUP BOTTOM FITTING
47	7479941	SPRAYER D30
48	5471022	SHOWER FILTER
49	5493039	UNDERCUP GASKET
50	7479967	CAM FLANGE
51	7479968	WASHER EP709 15,5X7,5X4
52	7479969	BUSHING
53	7479970	SPRING
54	7479971	PLUG CHROMED
55	7496073.01	GASKET OR 115 EP856
56	5221872.01	LOOSEN NUT 3/8"G H25 AISI303
57	7371003	INSULATING
58	7496084	GASKET
59	7305014	TERMINAL 2 HOLES
60	5496042	GASKET D11X4X4 EPT 70 (C6)
61	5224603AL	GASKET-HOLDER

BEZZERA MAGICA

TABLE 4 - (from 29/01/2014 up to 08/11/2018)
MAG1S

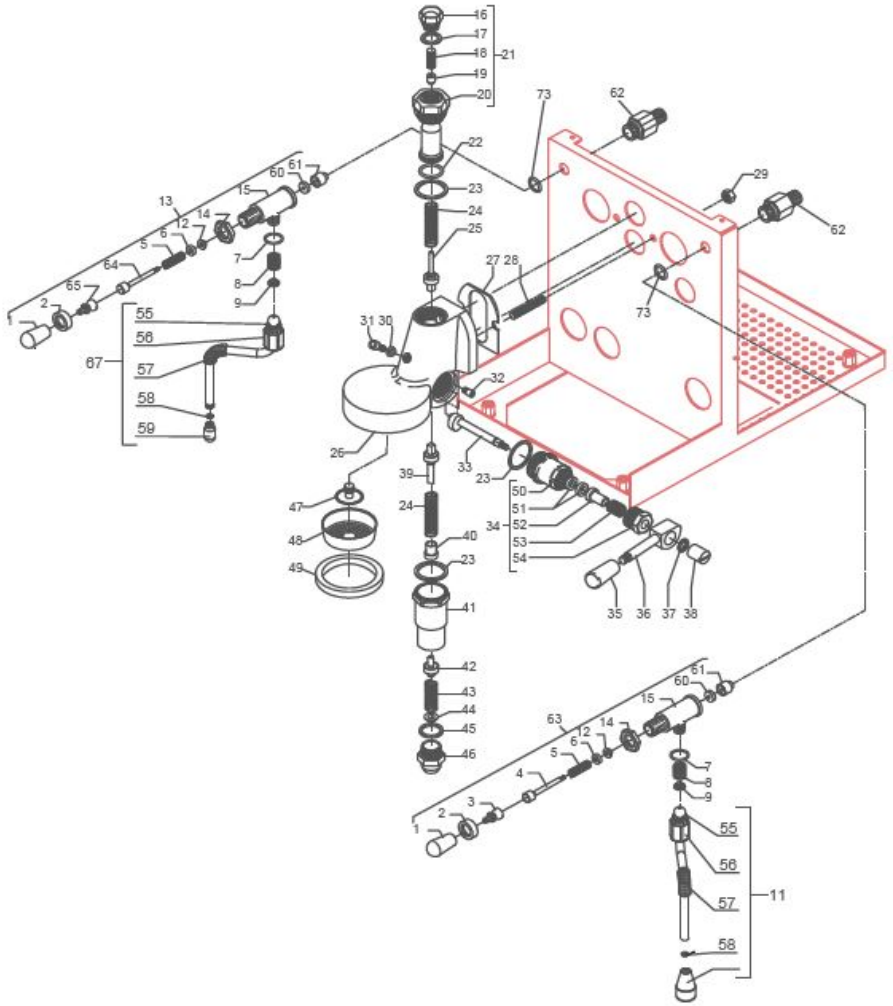

TABLE 4 - (from 29/01/2014 up to 08/11/2018)
MAG1S

POS	CODE	DESCRIPTION
62	5225417R	FITTING M14XM13 WHIT OR
63	5964085.02AL	ASSEMBLY TAP WITH OR
64	5260204DL	SHAFT D12X47
65	5225610	ARTICULATION M8 INOX
67	7479990.03	STEAM TUBE TERMINAL 2 HOLES SPHERE
73	7496052	OR GASKET 114

TABLE 4 - (from 29/01/2014 up to 08/11/2018)
MAG1S

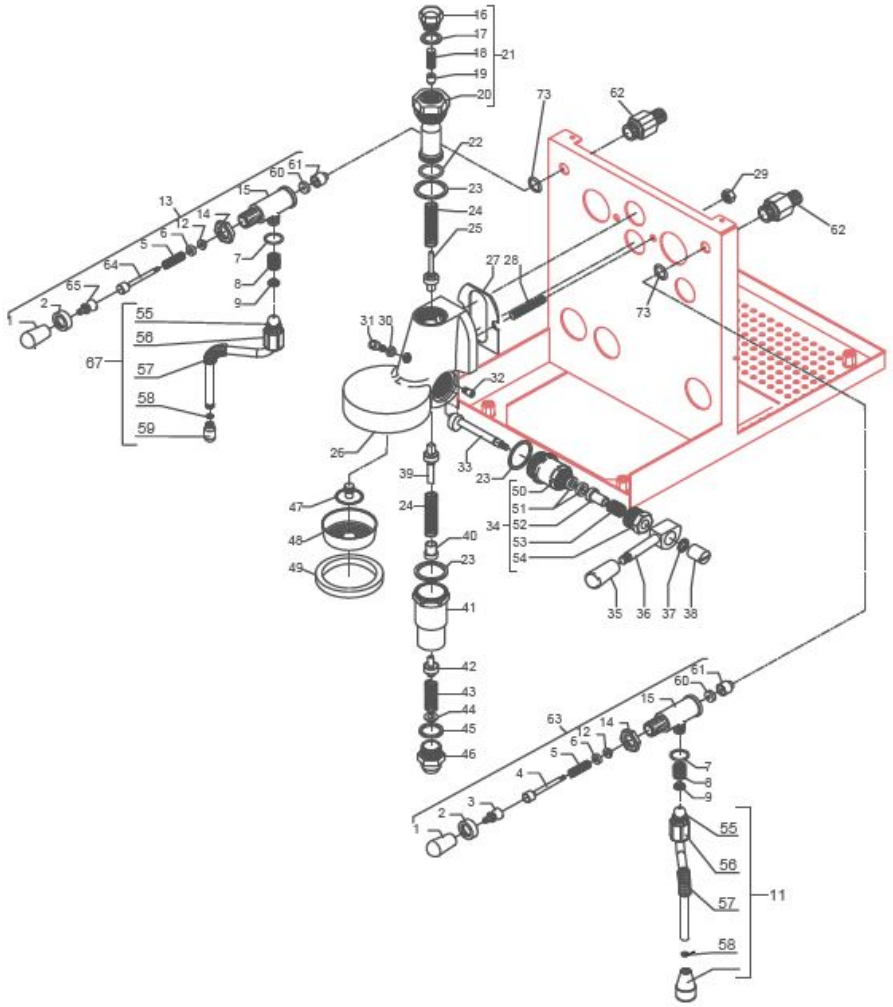

TABLE 4 - (from 09/11/2018 up to 06/10/2025)
MAG1S

POS	CODE	DESCRIPTION
1	7371511.01	LEVER KNOB
2	5262801.01	FERRULE 3/8"G H17 STAINLESS STEEL
5	5471513	SPRING
6	5261801	WASHER D11
7	5494021	NUT GASKET PTFE H=1,5
8	5471532.01	SPRING
9	5190501	COMPLETE CUP
11	5966566	WATER TUBE SEMISPHERE 14.3
12	5494004	GASKET D12 X 6 PTFE GRAPHITIZED
13	5964085.02AL	TAP COMPLETE WITHOUT HOOKING
14	5221826CM	NUT 3/8
15	5283055TW	TAP BODY OT FOR OR
16	7479952DL	UPPER ASSY PLUG
17	7479953	GASKET TF 22X17X2
18	7479954	INOX FILTER D8,5X22
19	7479955.01	INJECTOR CH7X9 M6X0.75 HOLE 0.7 INOX
20	7479956.01	UPPER SLEEVE ASSY
21	7479933.01	INJECTOR 0,7 UPPER SLEEVE ASSY
22	7479934	GASKET OR 128 VITON
23	7479935	GASKET TF D35X30X2
24	7479936	DELIVERY VALVE SPRING
25	7479937	DELIVERY VALVE ASSY
26	7479940AL	LEVER BODY GROUP CHROMED OT57
27	7493011	INSULATING
28	5267013	TIE ROD M8 X 31 ASTM A193
29	7811402	NUT M8 UNI5587 A2
30	7479938	GASKET TF D10X6X1
31	7479939	SCREW TCE M6X8
32	7479951	CAM STOP PIN
33	7479950	CAM SHAFT

BEZZERA MAGICA

TABLE 4 - (from 09/11/2018 up to 06/10/2025)
MAG1S

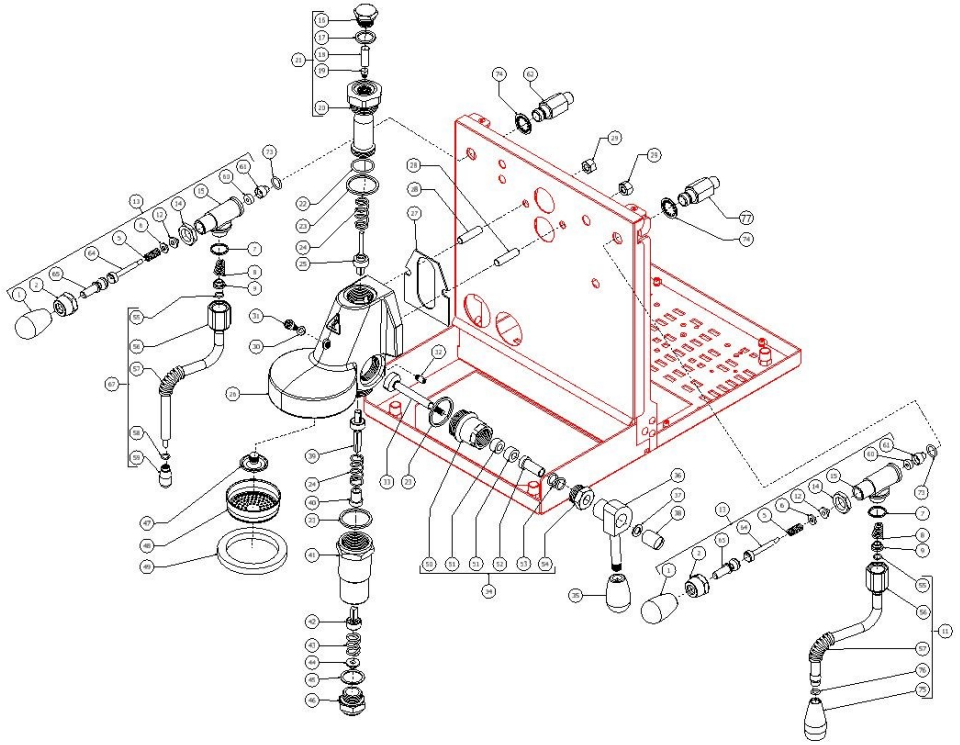

TABLE 4 - (from 09/11/2018 up to 06/10/2025)
MAG1S

POS	CODE	DESCRIPTION
34	7479949	CAM FLANGE ASSY
35	7371511.01	LEVER KNOB
36	7479931	DELIVERY LEVER
37	7479947	WASHER D8
38	7479948	CAP D15XM6
39	7479946	ASSEMBLY VALVE
40	7479942	SPRING GUIDE BUSHING
41	7479957	LOWER SLEEVE ASSY
42	7479943	ASSEMBLY RELIEF VALVE
43	7479944	DRAIN SPRING
44	7479945	JET-BREAKER BUSHING D15X6
45	7479960	GASKET TF D26x21x2
46	7479961	GROUP BOTTOM FITTING
47	7479941	SPRAYER D30
48	5471022	SHOWER FILTER
49	5493039	UNDERCUP GASKET
50	7479967	CAM FLANGE
51	7479968	WASHER EP709 15,5X7,5X4
52	7479969	BUSHING
53	7479970	SPRING
54	7479971	PLUG CHROMED
55	7496073.01	GASKET OR 115 EP856
56	5221872.01	NUT 3/8
57	7371004	INSULATING
58	7496095	OR GASKET 6X1.2 EPDM70
59	5266609	STEAM TERMINAL 2 WAYS AISI303
60	5496042	GASKET D11X4X4 EPT 70 (C6)
61	5224603AL	GASKET-HOLDER
62	5900035	STEAM HOSE AND FITTING KIT – STREGA MAGICA MITICA BZ16
62	5900037	STEAM HOSE AND FITTING KIT – MAGICA PID/MITICA TOP

BEZZERA MAGICA

TABLE 4 - (from 09/11/2018 up to 06/10/2025)
MAG1S

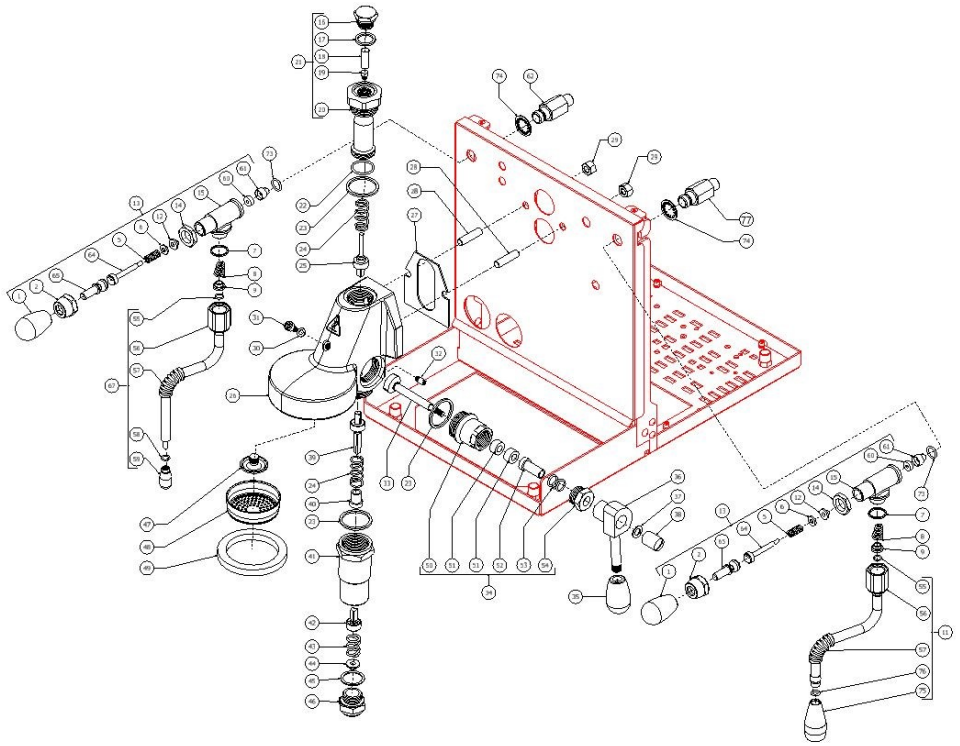

TABLE 4 - (from 09/11/2018 up to 06/10/2025)
MAG1S

POS	CODE	DESCRIPTION
64	5260204DL	SHAFT D12X47
65	5225610	ARTICULATION M8 INOX
67	7479990.03	STEAM TUBE TERMINAL 2 HOLES SPHERE 14,3
73	7496052	OR GASKET 114
74	7814201	WASHER 14 DIN6798J A2
75	5226601TW	WATER HOSE TERMINAL
76	7496084	GASKET OR D6,4X1,9 NBR70
77	5900036	WATER HOSE AND FITTING KIT – MAGICA MITICA BZ16 S/R PM

BEZZERA **MAGICA**

TABLE 4 - (from 09/11/2018 up to 06/10/2025)
MAG1S

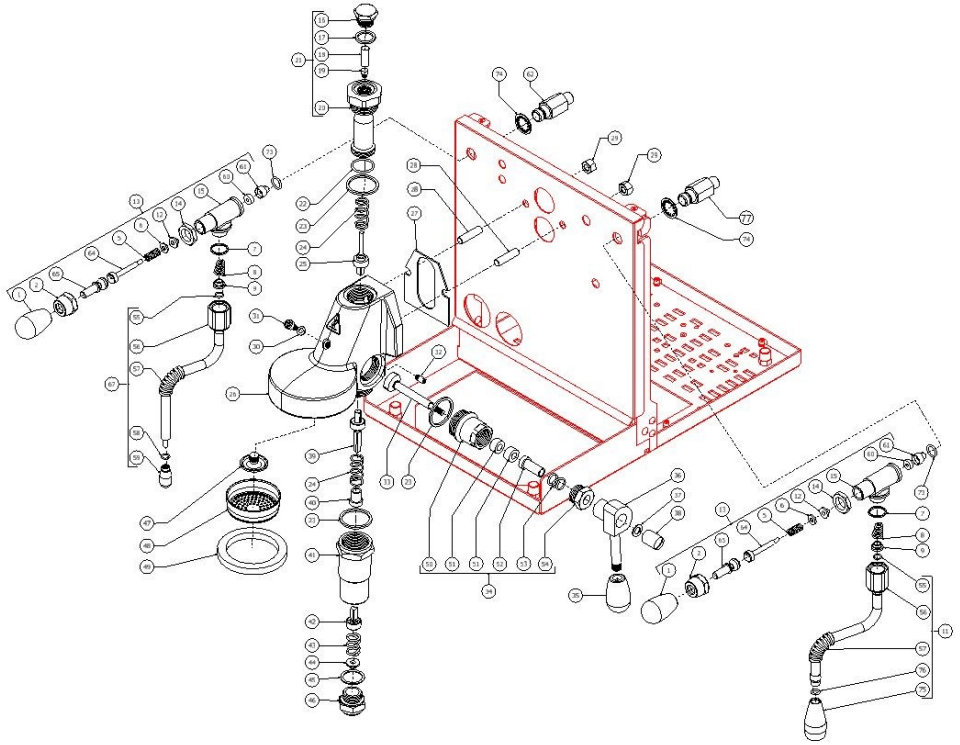

TABLE 4 - (from 07/10/2025)
MAG1S

POS	CODE	DESCRIPTION
1	7371511.01	LEVER KNOB
2	5262801.01	FERRULE 3/8"G H17 STAINLESS STEEL
5	5471513	SPRING
6	5261801	WASHER D11
7	5494021	NUT GASKET PTFE H=1,5
8	5471532.01	SPRING
9	5190501	COMPLETE CUP
11	5966566	WATER TUBE SEMISPHERE 14.3
12	5494004	GASKET D12 X 6 PTFE GRAPHITIZED
13	5964085.02AL	TAP COMPLETE WITHOUT HOOKING
14	5221826CM	NUT 3/8
15	5283055TW	TAP BODY OT FOR OR
16	7479952	UPPER ASSY PLUG
17	7479953	GASKET TF 22X17X2
18	7479954	INOX FILTER D8,5X22
19	7479955.01	INJECTOR CH7X9 M6X0.75 HOLE 0.7 INOX
20	7479956.01	UPPER SLEEVE ASSY
21	7479933.01	INJECTOR 0,7 UPPER SLEEVE ASSY
22	7479934	GASKET OR 128 VITON
23	7479935	GASKET TF D35X30X2
24	7479936	DELIVERY VALVE SPRING
25	7479937	DELIVERY VALVE ASSY
26	7479940AL	LEVER BODY GROUP CHROMED OT57
27	7493011	INSULATING
28	5267013	TIE ROD M8 X 31 ASTM A193
29	7811402	NUT M8 UNI5587 A2
30	7479938	GASKET TF D10X6X1
31	7479939	SCREW TCE M6X8
32	7479951	CAM STOP PIN
33	7479950	CAM SHAFT

BEZZERA MAGICA

TABLE 4 - (from 07/10/2025)
MAG1S

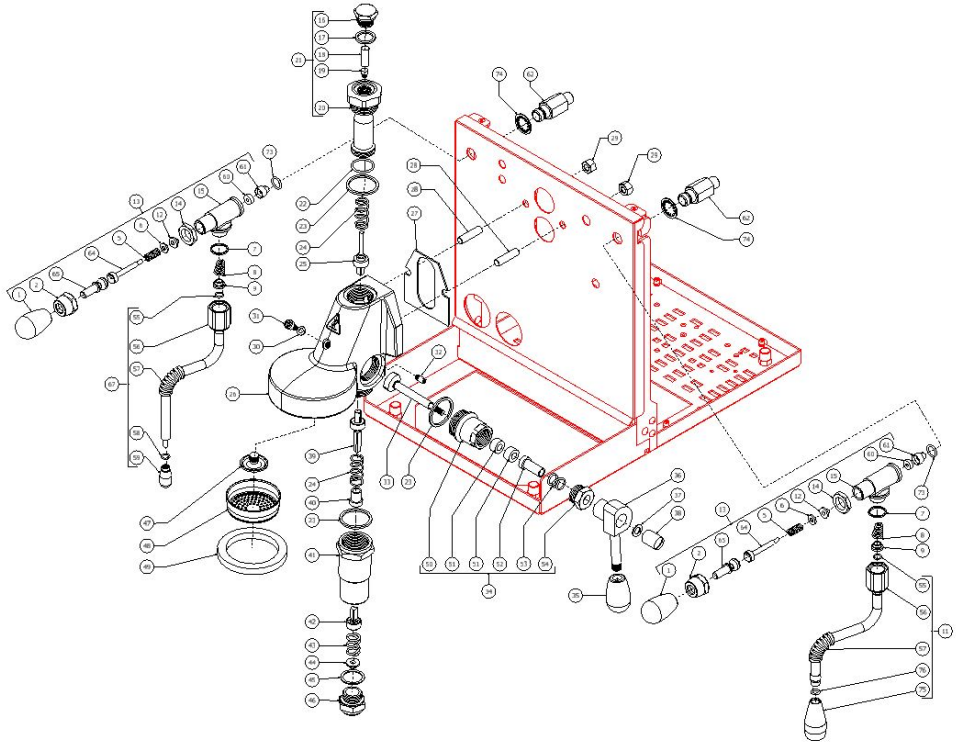

TABLE 4 - (from 07/10/2025)
MAG1S

POS	CODE	DESCRIPTION
34	7479949	CAM FLANGE ASSY
35	7371511.01	LEVER KNOB
36	7479931	DELIVERY LEVER
37	7479947	WASHER D8
38	7479948	CAP D15XM6
39	7479946	ASSEMBLY VALVE
40	7479942	SPRING GUIDE BUSHING
41	7479957	LOWER SLEEVE ASSY
42	7479943	ASSEMBLY RELIEF VALVE
43	7479944	DRAIN SPRING
44	7479945	JET-BREAKER BUSHING D15X6
45	7479960	GASKET TF D26x21x2
46	7479961	GROUP BOTTOM FITTING
47	7479941	SPRAYER D30
48	5471022	SHOWER FILTER
49	5493039	UNDERCUP GASKET
50	7479967	CAM FLANGE
51	7479968	WASHER EP709 15,5X7,5X4
52	7479969	BUSHING
53	7479970	SPRING
54	7479971	PLUG CHROMED
55	7496073.01	GASKET OR 115 EP856
56	5221872.01	NUT 3/8
57	7371004	INSULATING
58	7496095	OR GASKET 6X1.2 EPDM70
59	5266609	STEAM TERMINAL 2 WAYS AISI303
60	5496042	GASKET D11X4X4 EPT 70 (C6)
61	5224603AL	GASKET-HOLDER
62	5225416.01AL	FITTING M14XM13 ES19 H31 WITHOUT OR
64	5260204DL	SHAFT D12X47

BEZZERA MAGICA

TABLE 4 - (from 07/10/2025)
MAG1S

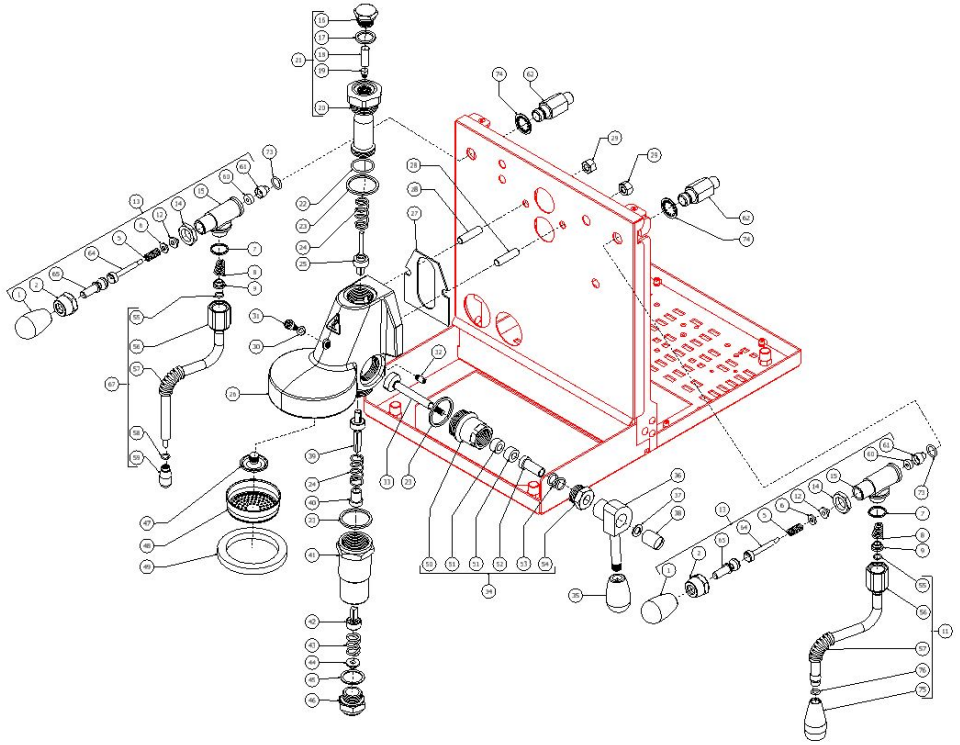

TABLE 4 - (from 07/10/2025)
MAG1S

POS	CODE	DESCRIPTION
65	5225610	ARTICULATION M8 INOX
67	7479990.03	STEAM TUBE TERMINAL 2 HOLES SPHERE 14,3
73	7496052	OR GASKET 114
74	7814201	WASHER 14 DIN6798J A2
75	5226601TW	WATER HOSE TERMINAL
76	7496084	GASKET OR D6,4X1,9 NBR70

BEZZERA MAGICA

TABLE 4 - (from 07/10/2025)
MAG1S

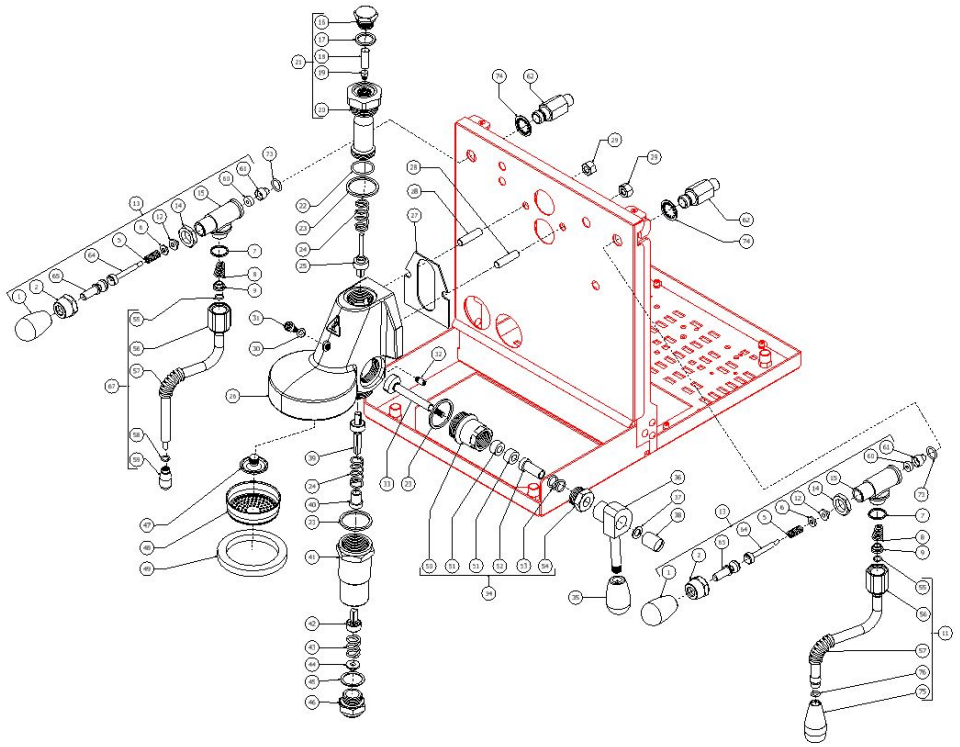

TABLE 5 - (up to 30/11/2015)
MAG1S

POS	CODE	DESCRIPTION
1	7661006R	LEVEL REGULATOR 100/120V 50/60HZ
1	7661007R	LEVEL REGULATOR 220/240V 50/60HZ
2	7635418	RELAY 16A 110V
2	7635419	RELAY 16A 220/230V
2	7635420	RELAY 16A 240V
3	7819404	TAPPING SCREW TPS D4.8X16 UNI 6955 A2
4	7816017	SCREW TCEI M4X6
5	5035709.02LL	ELECTRIC PARTS SUPPORT PLATE
6	7814001	WASHER D4 DIN 6798A A2
7	7819908	SCREW TTEI M4X8
8	7552001	CABLE WITH AUSTRALIAN PLUG
8	7555003	CABLE WITH SWITZERLAND PLUG
8	7551001	CABLE WITH USA PLUG 125V 15A
8	7551003	CABLE WITH USA PLUG 250V 20A
8	7555001	CABLE WITH SCHUKO PLUG
9	7614006	NUT PG13,5
10	7614007	CABLE-PRESS PG13,5
11	7663012R	FILTER RC
12	7633906.01	MICROSWITCH 250V
13	5221875CM	NUT M10X0,75
14	7633326	BIPOLAR SWITCH LEVER
15	7372507	SWTCH PROTECTION PLASTIC
16	7633622	GREEN LAMP 110/240V
17	7633621	ORANGE LAMP 110/240V

BEZZERA MAGICA

TABLE 5 - (up to 30/11/2015)
MAG1S

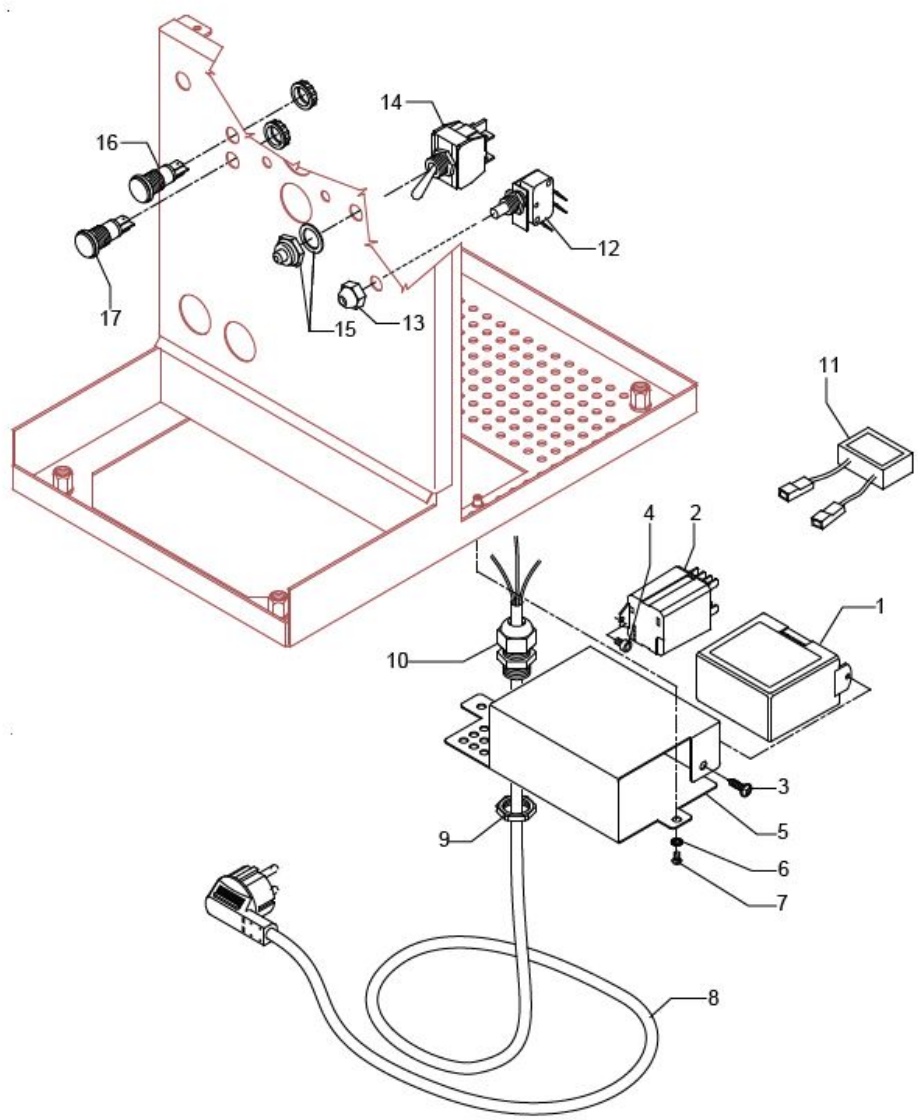

TABLE 5 - (from 01/12/2015)
MAG1S

POS	CODE	DESCRIPTION
1	7661006R	LEVEL REGULATOR 100/120V 50/60HZ
1	7661007R	LEVEL REGULATOR 220/240V 50/60HZ
2	7635418	RELAY 16A 110V
2	7635419	RELAY 16A 220/230V
2	7635420	RELAY 16A 240V
3	7819404	TAPPING SCREW TPS D4.8X16 UNI 6955 A2
4	7816017	SCREW TCEI M4X6
5	5035709.02LL	ELECTRIC PARTS SUPPORT PLATE
7	7819908	SCREW TTEI M4X8
8	7555001	CABLE WITH SCHUKO PLUG
8	7551003	CABLE WITH USA PLUG 250V 20A
8	7551001	CABLE WITH USA PLUG 125V 15A
8	7555003	CABLE WITH SWITZERLAND PLUG
8	7552001	CABLE WITH AUSTRALIAN PLUG
9	7614006	NUT PG13,5
10	7614007	CABLE-PRESS PG13,5
11	7663012R	FILTER RC 0,22MF 100 0HM UL
12	7633906.01	MICRO SWITCH
13	5221875CM	NUT M10X0,75
14	7633326	BIPOLAR SWITCH LEVER
15	7372507	SWTCH PROTECTION PLASTIC
16	7633624	GREEN LAMP
17	7633625	ORANGE LAMP
18	5074468.01SG	GROUP FRONTAL STAINLESS STEEL POLISHED

BEZZERA MAGICA

TABLE 5 - (from 01/12/2015)
MAG1S

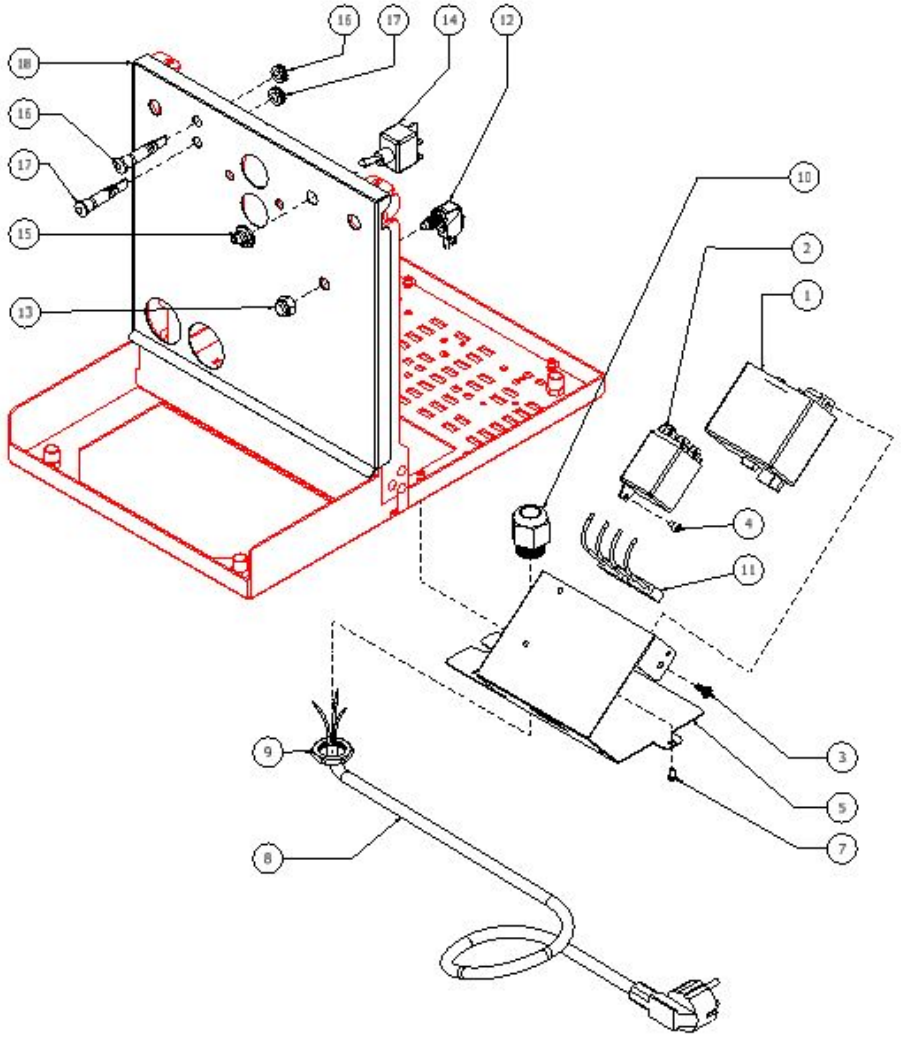

TABLE 5A - (up to 28/07/2022)
MAG1S PID

POS	CODE	DESCRIPTION
1	7666008	PROBE X THERMOPID AISI316 D3
2	5074908SG	GROUP FRONTAL MAGICA PM PID
13	5522076	TERMOPID PLATE
14	7633626	RED LED
15	7633326	BIPOLAR SWITCH LEVER
16	7372507	SWTCH PROTECTION PLASTIC
17	7555001	CABLE WITH SCHUKO PLUG
17	7552001	CABLE WITH AUSTRALIAN PLUG
17	7555003	CABLE WITH SWITZERLAND PLUG
17	7551001	CABLE WITH USA PLUG 125V 15A
17	7551003	CABLE WITH USA PLUG 250V 20A
18	7614006	NUT PG13,5
19	7614007	CABLE-PRESS PG13,5
20	7633906.01	MICROSWITCH 250V
21	5221875CM	NUT M10X0,75
22	7819908	SCREW TTEI M4X8
23	7814001	WASHER D4 DIN 6798A A2
24	5035709.02LW	ELECTRIC PARTS SUPPORT PLATE
25	7819404	TAPPING SCREW TPS D4.8X16 UNI 6955 A2
26	7661007R	LEVEL REGULATOR 220/240V 50/60HZ
26	7661006R	LEVEL REGULATOR 100/120V 50/60HZ
27	7635424.01	RELAY
28	7816017	SCREW TCEI M4X6
29	5968144	PID KIT 110V WHITE
29	5968143.01	PID KIT 220/240V WHITE

BEZZERA MAGICA

TABLE 5A - (up to 28/07/2022)
MAG1S PID

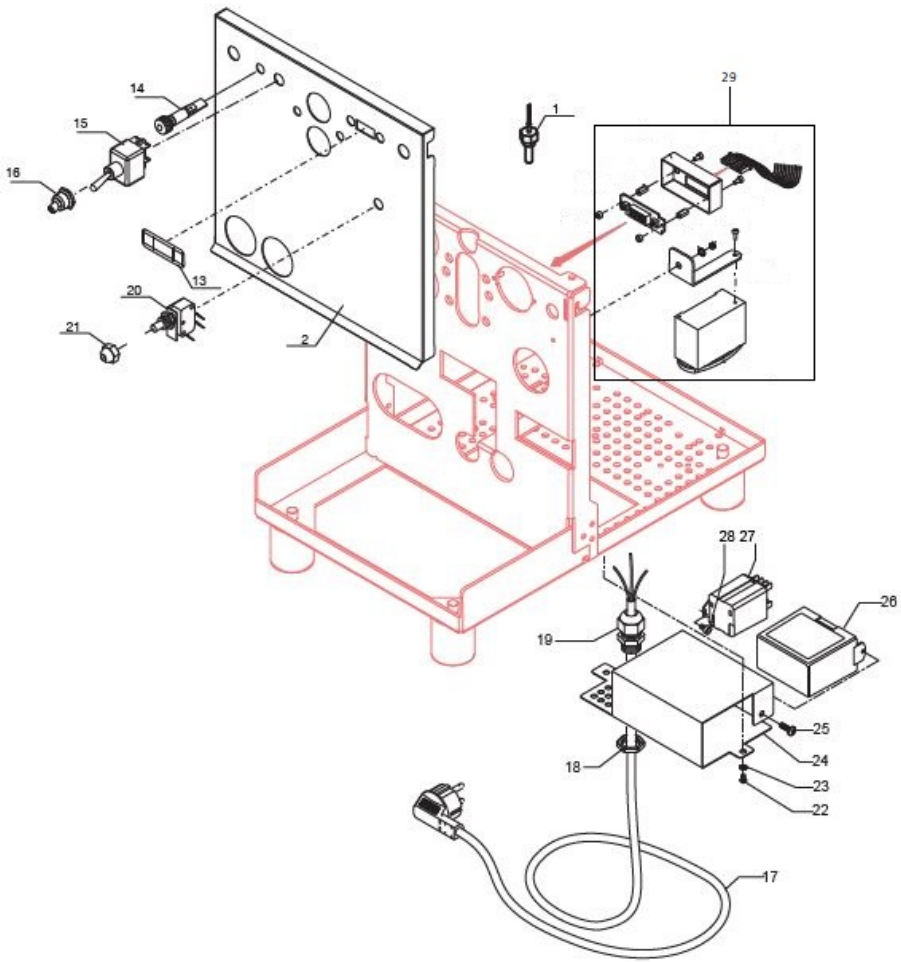

TABLE 5A - (from 29/07/2022)
MAG1S PID

POS	CODE	DESCRIPTION
1	7666008	PROBE X THERMOPID AISI316 D3
2	5074908SG	GROUP FRONTAL MAGICA PM PID
3	5018475LW	PID SUPPORT
4	7822602	NUT M3
5	7814001	WASHER D4 DIN 6798A A2
6	7663640	CABLE 15 VIE FEMALE L.320MM
7	5053059LW	PID DISPLAY COVER
8	7816016	M3X6 SCREW
9	5191511	SPACER
10	5191521	PID DISPLAY SPACER
11	7665544	TPID DISPLAY CARD WHITE (PR)
12	7434026	PID 110V WITHOUT DISPLAY SW.1.12
12	7434027	PID 230/240V WITHOUT DISPLAY SW.1.12
13	5522076	TERMOPID PLATE
14	7633626	RED LED
15	7633326	BIPOLAR SWITCH LEVER
16	7372507	SWTCH PROTECTION PLASTIC
17	7555001	CABLE WITH SCHUKO PLUG
17	7551003	CABLE WITH USA PLUG 250V 20A
17	7551001	CABLE WITH USA PLUG 125V 15A
17	7555003	CABLE WITH SWITZERLAND PLUG
17	7552001	CABLE WITH AUSTRALIAN PLUG
18	7614006	NUT PG13,5
19	7614007	CABLE-PRESS PG13,5
20	7633906.01	MICRO SWITCH
21	5221875CM	NUT M10X0,75
22	7819908	SCREW TTEI M4X8
24	5035709.02LW	ELECTRIC PARTS SUPPORT PLATE
25	7819404	TAPPING SCREW TPS D4.8X16 UNI 6955 A2
26	7661006R	LEVEL REGULATOR 100/120V 50/60HZ

BEZZERA MAGICA

TABLE 5A - (from 29/07/2022)
MAG1S PID

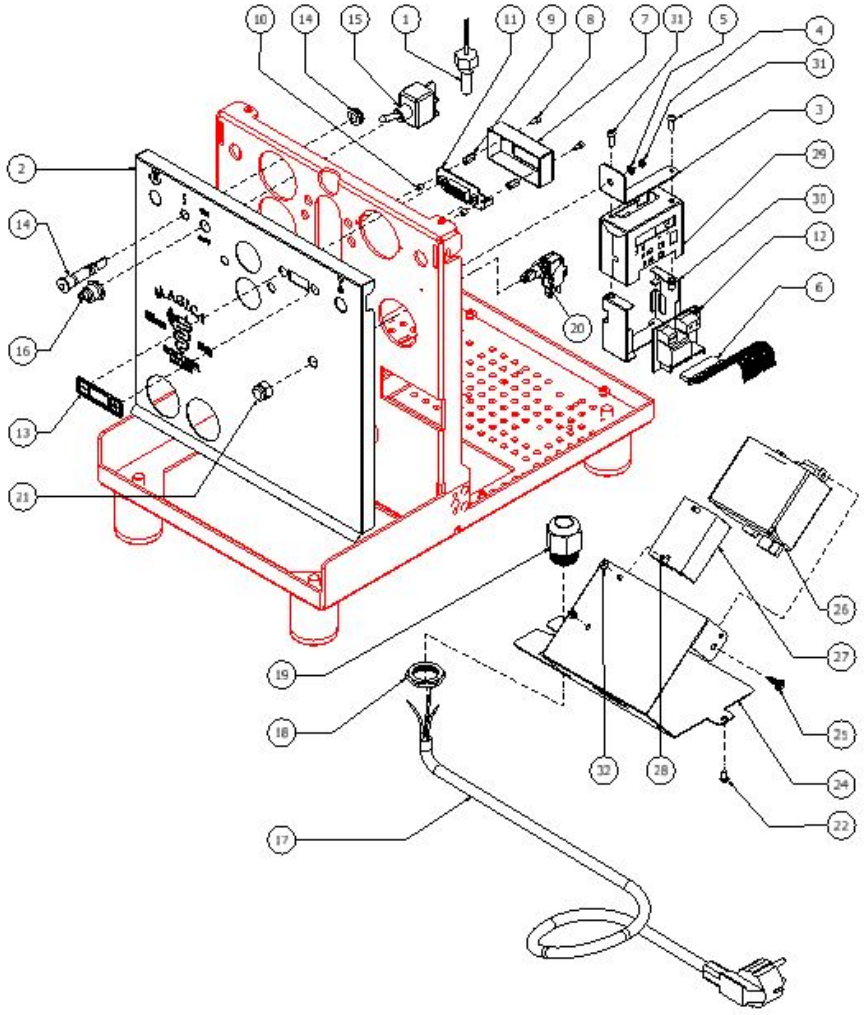

TABLE 5A - (from 29/07/2022)
MAG1S PID

POS	CODE	DESCRIPTION
26	7661007R	LEVEL REGULATOR 220/240V 50/60HZ
27	7635424.01	RELAIS SSR FOR T.PID
28	7816009	SCREW TCEI M4X10 UNI 5931A2
29	5053060LW	SUPPORT COVER PID CARD
30	5058513LL	SUPPORT PID CARD W/COMPASSES
31	7819901	SCREW TBEI M4X12 ISO 7380 A2 INOX
32	7812601	INOX NUT M4 UNI5588

BEZZERA MAGICA

TABLE 5A - (from 29/07/2022)
MAG1S PID

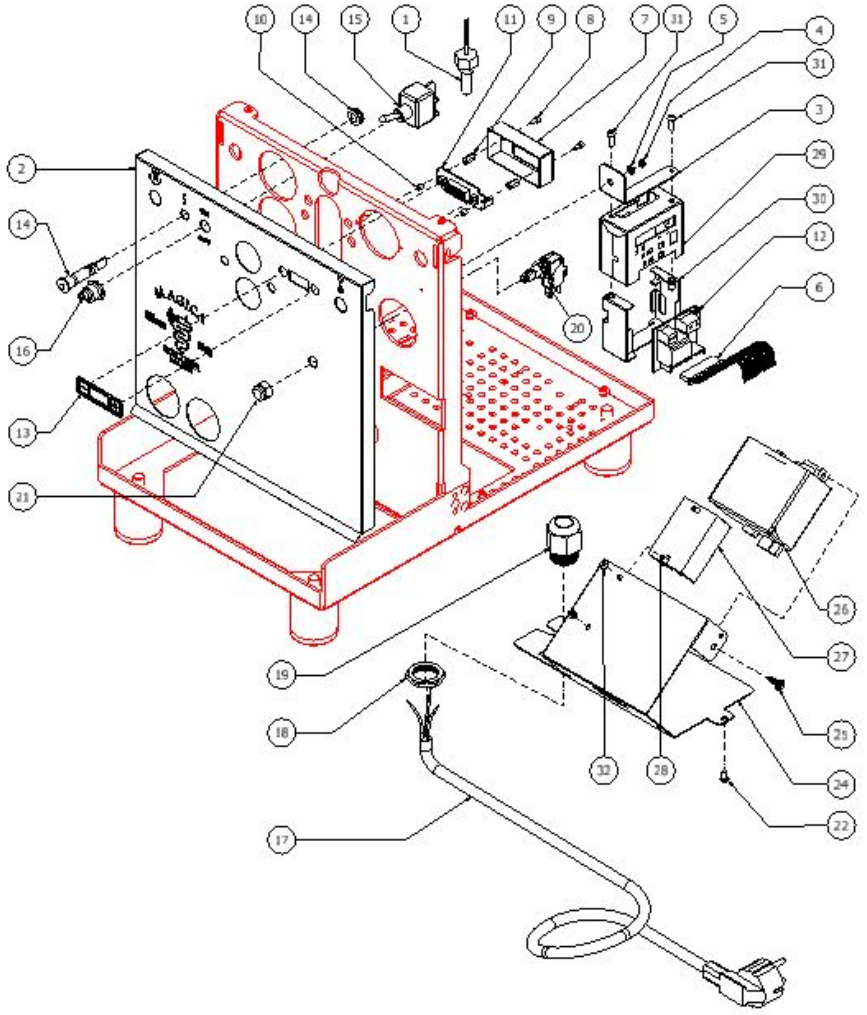

TABLE 6 - (up to 02/12/2012)
MAG1S

POS	CODE	DESCRIPTION
1	5373001	COFFEE-PRESS
2	5372101	MEASURER
3	7990603	CLEANING BRUSH
4	5471035	FILTER 2 CUPS 20 GRAMS
4	5471021.01	FILTER 2 CUPS 16 GRAMS AISI 304 WITH RUN CHANNEL
5	5471031.01	FILTER 1 CUP 10 GRAMS WITH RUN CHANNEL
6	5471038	BLIND FILTER
7	5471527	FILTER-HOLDER SPRING D1.2 AISI 302
8	7479972.01TW	FILTER-HOLDER
9	7305006TW	SPOUT 1 WAY
10	7305007TW	SPOUT 2 WAY
11	7371502	KNOB POLISHED
12	5373915CM	KNOB CHROME CAP
13	5965588.03R	ASSY FILTER-HOLDER E61 1CUP 80°
14	5965590.03R	ASSEMBLY COMPLETE FILTER-HOLDER 2

BEZZERA MAGICA

TABLE 6 - (up to 02/12/2012)
MAG1S

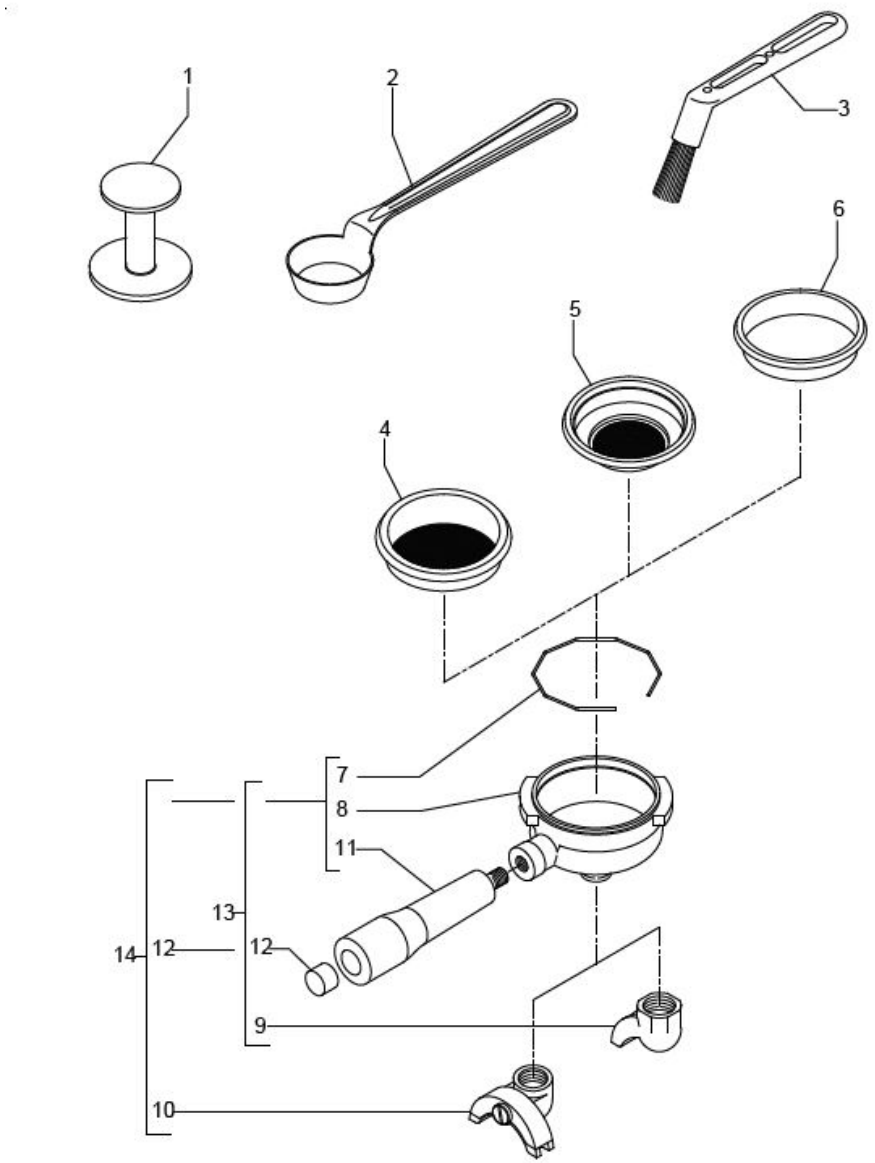

TABLE 6 - (from 03/12/2012)
MAG1S

POS	CODE	DESCRIPTION
1	7990603	CLEANING BRUSH
2	5373001	COFFEE-PRESS
3	5372101	MEASURER
4	5471038	BLIND FILTER AISI304
5	5471031.01	FILTER 1 CUP 10 GRAMS WITH RUN CHANNEL
6	5471035	FILTER 2 CUPS 20 GRAMS AISI 304 WITH RUN CHANNEL
6	5471021.01	FILTER 2 CUPS 16GRAMS AISI 304 WITH RUN CHANNEL
7	5965590.02R	ASSEMBLY COMPLETE FILTER-HOLDER 2 CUPS E61 W/LOGO
7	5965588.02R	ASSY FILTER-HOLDER E61 1CUP 80° W/LOGO
8	5471527	FILTER-HOLDER SPRING D1.2 AISI 302
9	7479972.01TW	FILTER-HOLDER
10	5978508.02	HANDLE WITH LOGO
11	5371203	HANDLE
12	7816026	SCREW TCEI M12X60
13	7809810	SCREW TC M3.5X8
14	5371204.01	CHROMED PLUG
15	5371205	PLATE WITH LOGO
16	7305006TW	SPOUT 1 WAY
17	7305007TW	SPOUT 2 WAY
18	7493021	GASKET FOR LOGO HANDLE

BEZZERA **MAGICA**

TABLE 6 - (from 03/12/2012)
MAG1S

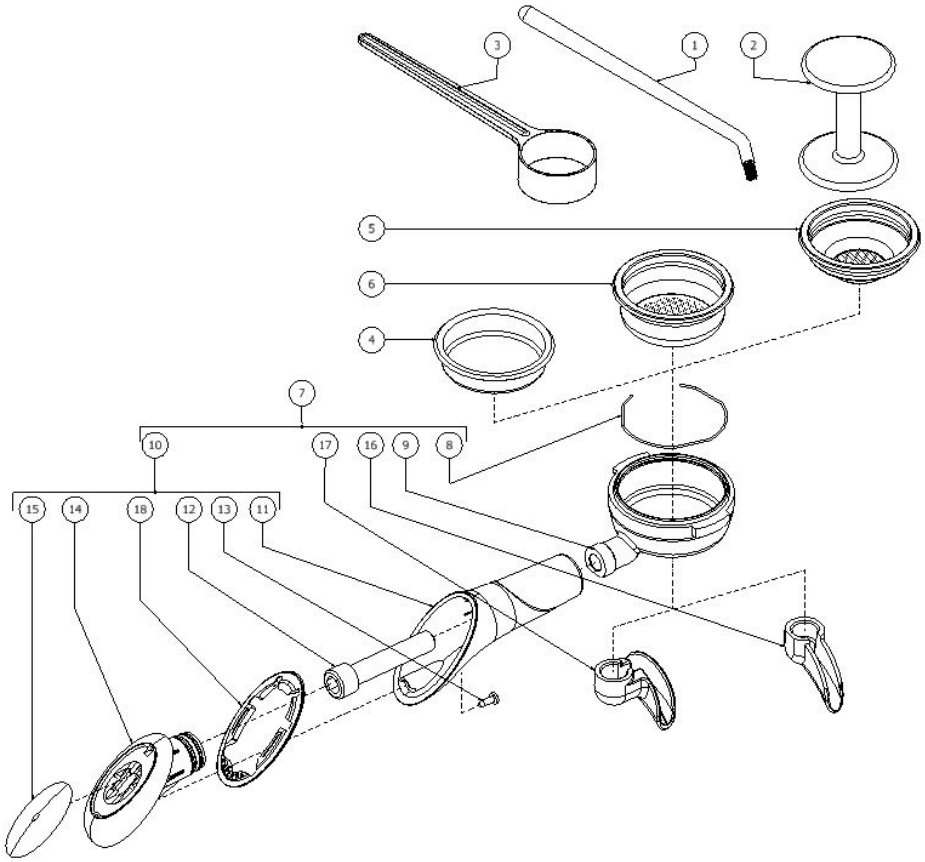



G.BEZZERA S.R.L.
MACCHINE PER CAFFE' ESPRESSO
Via Luigi Bezzera,1
20088 Rosate - Milano - Italy
Tel. +39 02 90848102 r.a.
Web: www.bezzera.com
e-mail: admin@bezzera.it